Tracking liquid helium production, distribution, and consumption by networked computer

Larry Frederick, Greg Labbe, and Gary G. Ihas [a,1]

[a] *Center for UltraLow Temperature Research and Department of Physics, University of Florida, Gainesvile, FL 32611 USA*

Abstract

A computer-networked liquid and gaseous helium monitoring system has been utilized in a university campus-wide operation. High efficiency is achieved by minimizing wasted production, excess storage, and lost gas. The system, its components, and operation is described.

Keywords: Helium;Liquefaction;Network

1. Introduction

The success of a small university-size helium liquefaction system is critically dependent on meeting demands without excess production and with conservation of helium gas. We have designed and built a system that measures the amount of helium, in both gas and liquid form, and monitors usage and needs through a local computer network. Each element of the system has an appropriate transducer (liquid level, gas flow, or gas pressure) that communicates information to the computer. In this way, the flow of helium is accurately tracked, usage measured, and losses immediately detected. Data, posted on the Web, offer an instantaneous picture of liquid availability, demand, and problems in techniques and equipment for the system administrator and all users. All data for billing is readily available. The design philosophy was to track every helium atom used for cryogenics. To do this, a system was needed that could be looked at instantaneously and which accounted for all gaseous and liquid helium. Clearly, computer control, capable of reading all parameters, calculating the total helium in the system, and showing where it was, from where it had come, and where it had gone, was needed. To achieve this goal, accurate liquid level indicators and gas flow meters had to be developed which could run on low power, be activated both by local users and the system administrator, and allow recording of liquid used and gas evolved at each lab. A simple, inexpensive network with high connectivity had to be developed and installed in each building where liquid helium was to be used. Custom computer interfaces were built which allow personal computers to interrogate the transducers of the system, read information generated by users, and perform calculations indicating, for example, liquid needs or problems causing helium gas losses.

[1] Corresponding author. E-mail:ihas@phys.ufl.edu

2. System Components

The Helium Monitoring System (Fig. 1) currently consists of seven components. The various components are:

HOST - A personal computer with terminal software and an RS-232 serial port. Only one is required for each building, but more may be added for convenience. Each requires its own COMMUX.

COMMUX (Communications Multiplex) - A device used to interface between the HOST RS-232 serial line and a RS-485 multi-drop network (CRYONET).

HLD# - The helium level detector used to measure the liquid level in a helium transport dewar. A special design allows resolution to 1%. When transferring, users input their name and lab number for accounting purposes.

SLD# - The helium level detector used to measure the liquid level in a research cryostat or stationary storage dewar.

GASMAN - A device used to read the helium gas flow meters on liquifier and cryostats. This device can be built to read either single or multiple gas meters.

REPEATER - Optical fiber repeater–RS-485 communications on one side and optical fiber on the other side. This device is used to isolate the electrical communications between different parts of the CRYONET, and to communicate to the CRYONET. In particular, it is used to penetrate the wall of an rf shield room.

CRYONET - An RS-485 multi-drop network used for communication among the different elements of the helium monitoring system. A 4-wire cable is used (thin lines in Fig. 1), with 2 wires reserved for the computer interface and 2 wires used for supplying DC power to the various components. Isolation is achieved with fiber optics (thick lines in Fig. 1). Each isolated segment must have its own power supply. Data speed of 4800 baud is used to allow longer communication distances between repeaters (currently 2000 feet). All devices utilize a Motorola micro-controller.

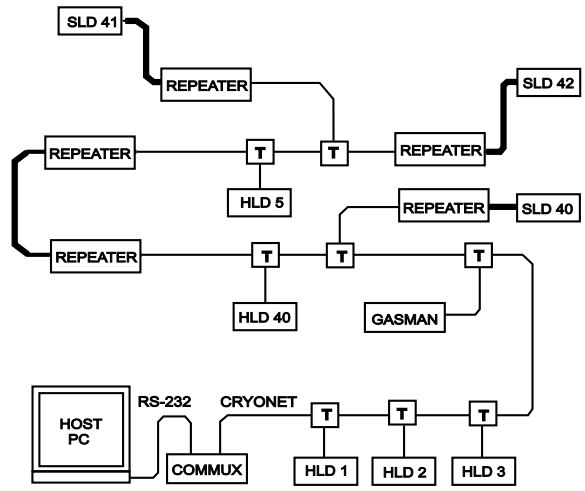

Fig. 1. Schematic diagram our system. Labels defined in text. The numbers of each component, use of wire (thin line), fiber optic (thick line), and T connections may vary.

3. Operation

Measurements of liquid level (volume) and evolved gas may be initiated and read locally or with the host computer. Each device has a net identification number and a buffer memory, which may be interrogated at any time. They are battery powered and charged through the CRYONET, so that they make be left off-line for extended periods. It is possible to have 255 devices, not including repeaters, for each COMMUX on the net. Pressure monitoring devices are being installed, allowing constant monitoring of the amount of stored high pressure gas.

The system is currently used in 5 buildings by 19 individual laboratories. In 1998, 55,000 liters of liquid helium were produced, and 43,000 liters used in experimental cryostats through a total of about 400 transfers. Helium gas lost rate averaged about 11% for the last 3 years, high because of a rapid increase in users. Loss rate of 5% should be achievable.

Acknowledgement

Supported by NSF grant DMR 9214191 and UF.