Measuring radio frequency properties of materials in pulsed magnetic fields with a tunnel diode oscillator

T. Coffey, Z. Bayindir, J. F. DeCarolis, M. Bennett,[a] G. Esper, and C. C. Agosta[b]
Department of Physics, Clark University, Worcester, Massachusetts 01610

(Received 27 June 2000; accepted for publication 3 September 2000)

Tunnel diode oscillators have been used in many types of experiments that measure the properties of materials. We present the details of an apparatus that extend these tunnel diode techniques to measure the properties of materials in pulsed magnetic fields. In the most common version of this method, a sample is placed in the inductor of a small rf tank circuit powered by a tunnel diode and the conductivity, magnetization, or penetration depth is measured. We explain in this article how the sample and configuration of the radio frequency fields determine which property is measured. Our major innovations are to stabilize the tunnel diode oscillator during a magnet pulse by using compensated coils in the tank circuit and the development of two methods, one digital and one analog, to measure the frequency and amplitude shifts in the oscillator during the short (10 s of ms) magnet pulse. We illustrate the power of this new measurement method by showing preliminary results of the superconducting transition and the Shubnikov–de Haas effect in the organic conductor κ-$(ET)_2Cu(NCS)_2$. The Shubnikov–de Haas effect shows particularly high amplitude oscillations due to magnetic breakdown orbits. © *2000 American Institute of Physics.*
[S0034-6748(00)01912-2]

I. INTRODUCTION

We have developed a radio frequency measurement technique based on a tunnel diode oscillator (TDO) that is suitable for millisecond and longer pulsed magnetic fields. We have successfully used this technique to measure superconducting transitions and the Shubnikov–de Haas (SdH) effect (oscillations in resistivity) as a function of magnetic field in organic conductors. By successfully measuring SdH oscillations we show that other measurements such as magnetic susceptibility in insulators, nuclear magnetic resonance signals, and penetration depth in metals are possible in pulsed magnetic fields using this technique. We believe that the TDO in pulsed magnetic fields will enhance many studies of condensed matter in high magnetic fields.

Our innovation was to redesign the TDO system to work in pulsed magnetic fields. We were motivated to do this because many experiments on novel conducting systems involve ever increasing magnetic fields, and the way to create the highest magnetic fields is to use pulsed magnetic fields.[1] In pulsed magnetic fields traditional four lead transport measurements become difficult because the high resistance of the samples (or the contacts), and stray capacitance in the leads form RC time constants that are long compared to the response demanded by the short (tens of milliseconds) magnet pulse. This problem is true for ac or dc transport measurements, and has had some solutions,[2] but always makes transport measurements in a pulsed magnetic field difficult. Using a rf field as a probe overcomes these time constant problems as has been shown in the past.[3] An additional advantage of the TDO method over traditional transport measurements, for pulsed or dc fields, is that no leads need to be attached to the sample. Leads can stress small samples and broaden superconducting transitions or other phase transitions. There is also the possibility that the TDO method only measures conductivity in one plane allowing the selective examination of isotropic conductivity. This possibility will be addressed later in this article.

Unfortunately, TDOs have not been used extensively in recent years, partially because they involve rf circuits that can be troublesome to use, but more often because it has been difficult to understand what properties are measured by the TDO. Careful analysis shows that in some cases the TDO method is similar to the cavity perturbation techniques popular in the microwave region of the spectrum. In other cases the TDO technique is similar to an ac magnetometer. Despite the perceived difficulties in using them, TDOs have been used for many types of condensed matter physics measurements in the past, starting with the determination of the dielectric constant of ^{3}He in Meyers group in 1966.[4] Since then many different types of phenomena have been measured using TDOs,[5–15] and their sensitivity and stability has been increased and carefully analyzed particularly by Van Degrift[16,17] and others.[18,19] Although the use of TDOs to study magnetoresistance in organic conductors was suggested and tested by Brooks,[6] very few studies have been done on novel conductors until recently[5,20] and most of the older studies concentrated on the superconducting transition.[9]

In our TDO method the sample is placed in the coil of a self resonant tank circuit. Measuring the frequency and the amplitude of the circuit oscillations gives information about

[a]Present address: Los Alamos National Labs, MS: E53, Los Alamos, NM 87545.
[b]Author to whom correspondence should be addressed; electronic mail: cagosta@clarku.edu

 © 2000 American Institute of Physics

Downloaded 27 Aug 2001 to 140.232.2.33. Redistribution subject to AIP license or copyright, see http://ojps.aip.org/rsio/rsicr.jsp

the penetration depth, resistivity, or susceptibility of the sample. Two problems had to be overcome to use the standard TDO method in a pulsed magnetic field. The first problem is that the coil used in the tank circuit at the heart of the TDO generates a voltage due to the dB/dt of the magnet pulse and this voltage will push the diode off of its bias point during a pulse. The second problem was to develop a data acquisition system that would measure frequency and amplitude thousands of times during the magnet pulse in order to study that phenomena as a function of magnetic field. The duration of a pulsed field can be anywhere between 10 and 2000 ms. The solutions to these problems are addressed below in detail. Before we address these experimental details, some general principles of the TDO circuit are presented. Special emphasis is given to the question of what properties are measured in the TDO. It will be shown that the quantity measured depends on the type of sample measured and the frequency of the TDO. In the last section of the article some preliminary data are shown.

II. THEORY

A simple representation of the TDO circuit is shown in Fig. 1. The current biases the tunnel diode such that the tank circuit oscillates at its resonant frequency. The sample under study goes between the capacitor plates or in the inductor of the tank circuit depending on the type of measurement that is desired. As examples, for measuring the dielectric constant the sample goes between the capacitor plates, for susceptibility, penetration depth, or resistivity, the sample goes into the inductor.

Many articles explain the stability and noise characteristics of the TDO.[8,17] What has not always been well understood is how a sample interacts with the tank circuit in the TDO. Certain configurations, such as placing the coil over an infinite plate conductor,[14] or placing an ellipsoidal magnetic sample in a coil,[21] have been solved analytically. In the case of irregularly shaped samples, common to our field of study, only approximations or empirical equations can be found to relate the raw data, the frequency and amplitude of the oscillations, to the properties of the sample. In all cases we use the following method to understand our measurements.

The tank circuit is modeled as a driven, damped harmonic oscillator and the sample couples to the inductor, changing the inductor's impedance. If the sample only lightly perturbs the tank circuit we can find simple relationships between the raw data and the measurements we seek. For example, when we are studying type I superconductors, the frequency that we measure is proportional to the penetration depth of the sample for small frequency shifts.[22] In general, we measure the complex conductivity of the sample, $\sigma=\sigma_1+i\sigma_2$, which is the inverse of the complex impedance. The rf field penetrates a distance $\delta=1/\sqrt{\pi\mu_0 f\sigma_1}$ (where σ_1 is the real part of the conductivity, f is the frequency, and μ_0 is the permittivity of free space) into the sample or less if it is a superconductor with a smaller London penetration depth. If the frequency is high and δ is small compared to the size of the sample, or the sample is superconducting, it is common to say that we measure the surface

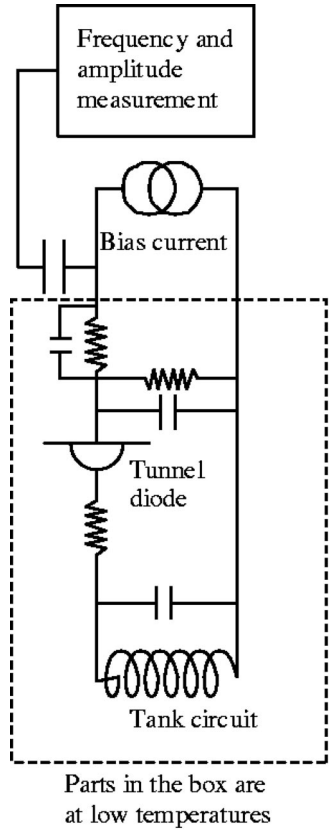

FIG. 1. The tunnel diode oscillator circuit.

impedance $Z_s=R_s+iX_s$, where R_s is the surface resistance and X_s is the surface reactance. In our experiment the actual measurements we make are of the frequency and amplitude of the oscillations of the TDO tank circuit, which are related to the imaginary and real parts of the surface impedance, respectively. The amplitude is directly related to the quality factor Q of the circuit.

To analyze the data for the irregular shaped samples common to our experiments we start with the following questions about the general conditions of the measurement. Does the combination of frequency and resistivity allow the rf fields to penetrate the bulk of the sample or just a small skin depth? Is the sample an insulator? Is it magnetic? Is it a superconductor? The following cases are common.

(1) An insulating magnetic sample loads the inductor with a constant volume ($\delta=\infty$) and susceptibility. This is a common configuration that has been solved for the case of loaded core inductors. In the *ARRL Handbook*,[23] for example, it states that $L=L_{\text{empty}}(1+\chi r)$ where χ is the susceptibility of the sample and r is the filling factor.

(2) The properties of type II superconductors in rf fields have been worked out by a few different groups in both the Meissner and the flux states.[13,24,25] The dominant effect in these materials is the coupling of the rf field to the fluxoids which changes the effective skin depth. As the superconductivity is destroyed, either by temperature or magnetic field, the superconductor crosses over to metallic behavior.

(3) Metallic samples have different limits depending

Downloaded 27 Aug 2001 to 140.232.2.33. Redistribution subject to AIP license or copyright, see http://ojps.aip.org/rsio/rsicr.jsp

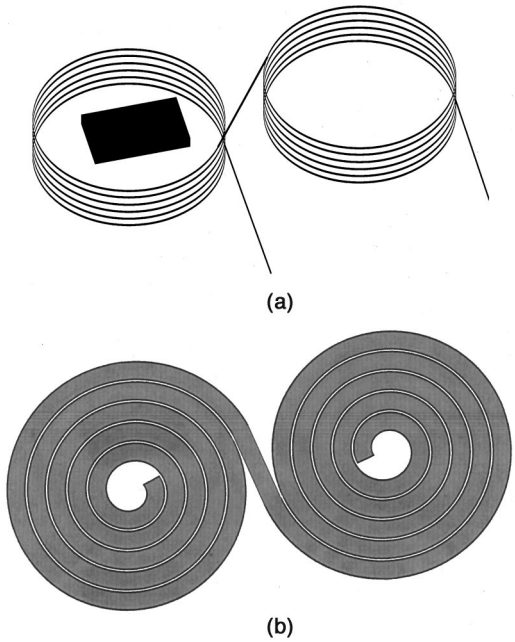

FIG. 2. A double coil will cancel the voltage created by a changing global magnetic field: (a) the configuration we used for these experiments; (b) a spiral that could be lithographed for almost perfect compensation.

upon the relationship of their size and skin depth, although in all cases their response is dominated by the effective diamagnetism of their conduction electrons (eddy currents) and the effective volume as δ changes. Even if δ is larger than the sample, the effective diamagnetism will cause the TDO frequency to shift as a function of the resistivity making the TDO good for measuring resistivity,[26,27] but poor for measuring the smaller signal coming from the magnetic properties of conductors. A calculation relating to these effects is done at the end of this article.

III. APPARATUS

The solutions to the two problems mentioned in Sec. I are the main innovations described in this article. The problem most intrinsic to using the TDO in a pulsed magnetic field is suppressing the induced voltages generated by the dB/dt of the pulsed magnetic field that destabilize the circuit. In particular, the inductor of the TDO tank circuit creates a large voltage during the pulse that pulls the TDO frequency by moving the tunnel diode bias point, or sometimes quenches the oscillations by pushing the diode out of its negative resistance region completely. Although one could design an active bias circuit that might solve this problem, the solution we have implemented is to use double counter wound pick up coils. In its simplest form we used the configuration in Fig. 2(a). The coils are far enough apart that they do not couple well enough to cancel each other's inductance, but the global field of the pulse magnet will induce equal and opposite voltages on each coil. The sample, however, only affects one coil. The result is that the filling factor of the sample is halved, the inductance is double that of a single coil, and the induced voltage on the double coils from the global dB/dt is zero. With other configurations, such as

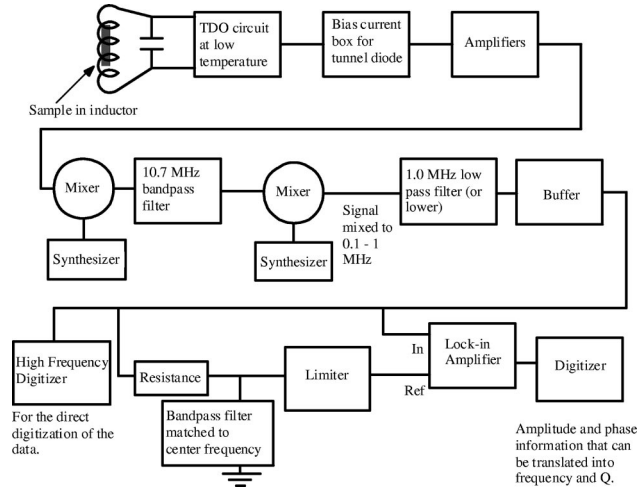

FIG. 3. The frequency–amplitude discriminator we developed for our measurements.

powder samples or large platelet samples, the filling factor can remain high because both coils can be used.

This modification of the original design, which had a single inductor, successfully reduced the induced voltage enough to use the TDO in a pulsed field. Better options exist for making matched coils, and in our next set of experiments we plan to use flat coils in a spiral configuration as shown in Fig. 2(b). The advantage of this setup is that the coils can be made with a lithographic process that will insure almost perfect compensation. As the compensation gets better, the background frequency shift gets smaller, the noise level drops, and the signal becomes easier to separate from the background. In addition, Gevorgyan *et al.*[11] found that the sensitivity is greatly enhanced if flat coils are used to measure platelet samples.

The second problem we needed to address was how to measure the frequency and amplitude of the oscillations at rates up to or exceeding 10^5 samples/s. Two solutions to this problem were pursued. For general use we wanted to make an analog discriminator that could provide us with two voltages that were proportional to the frequency and amplitude. Second, we wanted to use a fast digitizer to record the oscillations directly. The raw oscillations could then be analyzed using software at a later time to find the amplitude and frequency as a function of time.

The method we chose for designing the analog discriminator came from a suggestion by Gil Clark (UCLA) and is shown in Fig. 3. The principle is to split the signal into two parts and create a linear frequency dependent phase shift on one of the two signals. In our setup, one part goes into the input channel of a lock-in amplifier. The other part goes through a band pass filter tuned near the mixed down TDO frequency and with a bandwidth comparable to the total change we expect in the TDO frequency. This signal goes into the reference channel of the lock-in. From the x and y outputs of the lock-in we can determine the amplitude and phase of the relationship of the two signals. The frequency is proportional to the phase and can be calibrated beforehand with a test signal. Therefore, if we record the x and y outputs we can translate them into amplitude and frequency.

Downloaded 27 Aug 2001 to 140.232.2.33. Redistribution subject to AIP license or copyright, see http://ojps.aip.org/rsio/rsicr.jsp

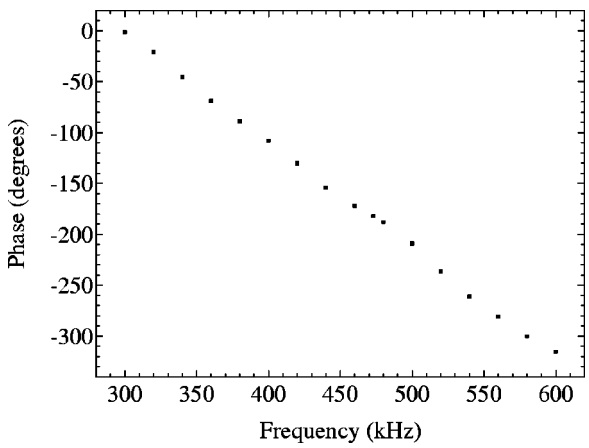

FIG. 4. An example of a calibration plot. To create this we programmed a frequency synthesizer to sweep through a particular frequency range, and fed that signal into our discriminator.

This type of discriminator may sound involved, but it is simpler to use than a phase locked loop and it gives amplitude information that is missing from a phase locked loop circuit. For our experiments the band pass filter had a center frequency of 500 kHz and an adjustable Q between 5 and 50, very reasonable values to attain with standard passive electrical components. In this system we also needed to fix the amplitude of the reference channel signal because the lock-in amplifier did not have a limiter on its input. To hold this amplitude fixed we ran the phase shifted signal through a comparator to make a square wave out of it, and then through a low pass filter to get rid of some of the higher harmonics of the fundamental. (In later systems we found this last low pass filter to be unnecessary.) Although these operations could introduce more phase shifts into the signal, the system was calibrated once it was all assembled and any additional phase shifts would have been included in our calibrations. As an example, the phase-frequency calibration for our first experiments is shown in Fig. 4.

IV. EXPERIMENTS

Before we do any experiments with the TDO in pulsed magnetic fields or dc fields it is necessary to do an empty cell calibration. The background signal is often $\sim$70 kHz from 0 to 15 T in any of our systems, pulsed or dc. We have not traced the exact origin of the background, however we do know that some of it comes from the magnetoresistance of the coil in the tank circuit. In addition, the circuit may be affected by a Kovar (a magnetic material) coating on the tunnel diode and the magnetoresistance of the bias resistors. We place the circuit containing the diode and the bias resistors well outside the magnet center to minimize these field induced effects. Depending on the filling factor of our samples and the effects we are measuring, our change in frequency due to the sample can range from 1 kHz to 1 MHz. Therefore, it is usually important to subtract the background carefully.

In later experiments we plan to isolate the source of the background, and redesign the circuit to reduce the problem. As an example, we have recently found a source of diodes that do not have Kovar on them and will be testing them soon. Another solution to this problem is to use two TDOs and use one to measure the background at all times.[11]

Our first experiments were run in the 60 T long pulse magnet at the National High Magnetic Field Laboratory (NHMFL) in Los Alamos.[28,29] The total pulse length was 2.3 s and the largest dB/dt was 380 T/s between 40 and 60 T. This is a unique pulsed field facility and was chosen because of its relatively small dB/dt given the size of the fields. We also ran similar experiments in the short pulse facility (dB/dt=4000 T/s). The TDO worked in this environment on the slower down sweeps, and recent improvements in our coils have shown good results in our own 42 T pulsed magnets (which have a maximum dB/dt= 2500 T/s).

To reduce eddy currents and heating in the tunnel diode circuit everything in the circuit but the coil is placed above the center of the magnetic field. In the Los Alamos system the tunnel diode was 0.42 m above center field. The large size of the long pulse magnets or a standard high field dc magnets results in a reduction of the fields and dB/dts at the diode circuit to 1/6 of the value at field center. In the short pulsed fields the height of tunnel diode reduces the fields and the dB/dt at the tunnel diode by a factor of 25 or more. In all cases the temperature of the diode circuit is the same as the ^{4}He bath. Thus, the temperature of the tunnel diode is the same as the sample from 4.2 down to 1.6 K, and remains at 1.6 K for lower sample temperatures. The diodes have a greater negative resistance as the temperature is lowered,[16] but this resistance hardly changes between 77 and 4.2 K. Based on the above conditions we have not seen any effects of eddy current heating of the tunnel diode in any of our experiments. In one case we used the TDO circuit successfully in a dilution refrigerator down to 35 mK, but only in a dc magnetic field.[5]

V. DATA

In our first experiment we investigated the superconducting transition in the organic superconductor κ-$(ET)_2Cu(NCS)_2$. The sample was placed in one of two coils that were 2.3 mm in diameter and oscillated at 52 MHz. The filling factor was $\sim$0.6. At zero field the frequency noise was less than $\pm$6 Hz over a 60 s period. Given the conductivity of the sample,[30] $3.8\times10^5\ \Omega^{-1}\,\mathrm{m}^{-1}$, we calculate the skin depth just above the superconducting transition at 10.5 K to be 1.4×10^{-4} m and getting larger at higher temperatures as the resistivity becomes greater. Thus, the rf penetration is on the order of the size of the sample or larger.

The superconducting transition is clearly visible in Fig. 5 with the background (discussed above) subtracted. For those who are familiar with this material, these data were taken with the conducting planes almost parallel with the applied magnetic field. Note that the critical field is much higher than the perpendicular value ($\sim$4 T as seen in Fig. 6), but not quite as high as it should be when the sample is exactly parallel to the field. Unfortunately, we could not align the sample carefully due to the lack of time during our run. The inset of Fig. 5 shows the raw data with data taken from previous work[31] on another organic superconductor in a similar orientation in a dc field. Although the scales are dif-

Downloaded 27 Aug 2001 to 140.232.2.33. Redistribution subject to AIP license or copyright, see http://ojps.aip.org/rsio/rsicr.jsp

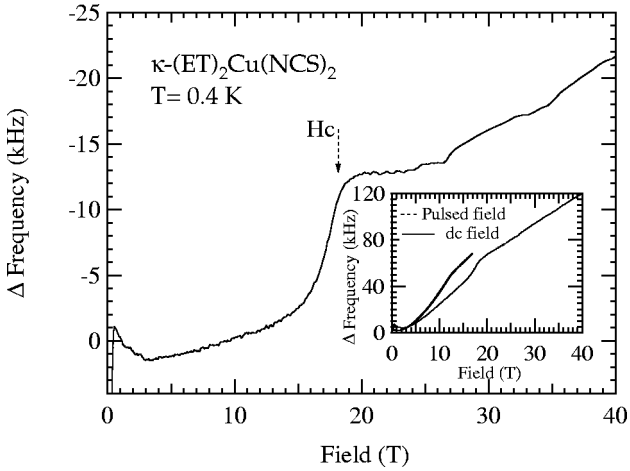

FIG. 5. The superconducting transition of κ-$(ET)_2$ $Cu(NCS)_2$ with the field almost parallel to the conducting planes. The inset shows the data with the background along with previous data from another superconductor taken in a dc applied magnetic field. The small jump in the data at low fields is from the superconducting transition in lead-tin solder on our coil leads. In later experiments we used silver epoxy to attach the coil and this glitch goes away.

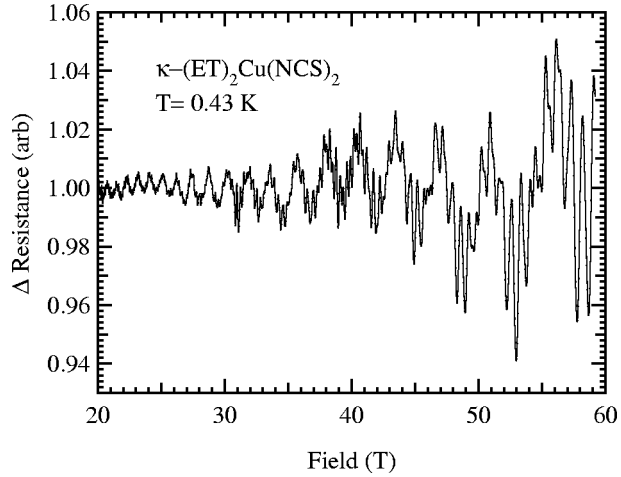

FIG. 7. Quantum oscillations in the organic conductor κ-$(ET)_2$ $Cu(NCS)_2$ with the smooth nonoscillatory behavior divided out.

ferent, the qualitative features of the two sets of data are very similar, showing that the experiment we are doing in pulsed fields is the same as the experiments we have been doing in dc fields. This similarity is one of the most important points of this article. We have shown that we can do comparable TDO experiments in dc or pulsed fields.

In our second experiment we measured the SdH effect in κ-$(ET)_2Cu(NCS)_2$ and saw both the closed α and the breakdown or β orbit. The difference between the superconducting studies mentioned above and this experiment is simply that in this experiment the orientation of the conducting planes in the sample is perpendicular to the magnetic field, which is ideal for the SdH oscillations. Note that you can still see the superconducting transition at about 4 T in Fig. 6. Two sets of data are shown in this figure. One set was taken by the analog discriminator method and goes up to 28 T. Above this field the frequency was well beyond the bandpass of our analog detector and the data were invalid. The brute force digital data is valid to full field, but we did not have enough memory to record the entire pulse, so the digital data are missing the signal below 20 T. Plotting the data together shows the full pulse, and the good overlap between the two data acquisition methods near the middle of the field range shows that the two methods are consistent. This figure proves that our data acquisition, particularly our new discriminator, is working accurately.

The oscillations in the frequency of the TDO signal well above the superconducting transition are proportional to resistance and are attributed to the SdH effect as we will prove below. These oscillations can be seen clearly by dividing the raw signal by the average nonoscillating signal as shown in Fig. 7. In Fig. 8 the fast Fourier transform (FFT) of the oscillations shows the fundamental α frequency, the β frequency, and $\beta+\alpha$ and $\beta-\alpha$ frequencies. The origin of the lower frequency oscillations, the α frequency, is a closed orbit on the Fermi surface. At higher fields tunneling occurs from the closed part of the Fermi surface to an open part resulting in the magnetic breakdown orbit β. All the fre-

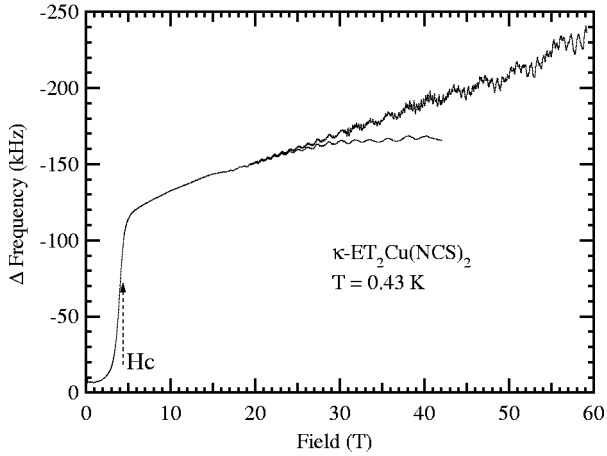

FIG. 6. The full field sweep of the resistance of κ-$(ET)_2$ $Cu(NCS)_2$. The lower field part is from the analog discriminator and the upper field part comes from the brute force digital method. Around 24 T the methods overlap, and the agreement is good.

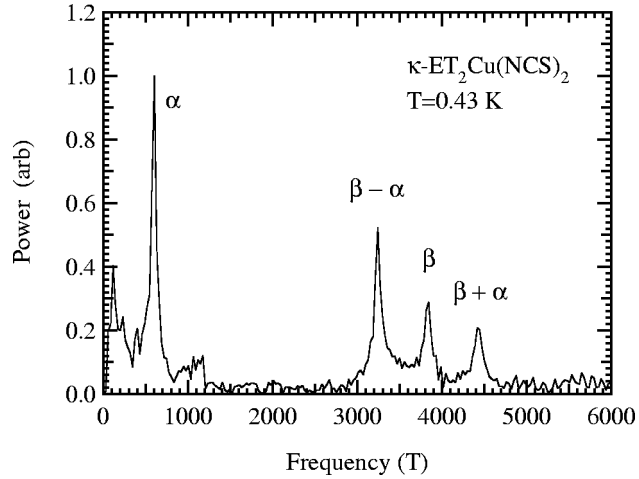

FIG. 8. The FFT of the oscillations in the previous figure. The higher frequencies are the result of electrons tunneling to create a breakdown orbit that covers most of the Fermi surface.

Downloaded 27 Aug 2001 to 140.232.2.33. Redistribution subject to AIP license or copyright, see http://ojps.aip.org/rsio/rsicr.jsp

quencies we determine are consistent with earlier work. A number of recent articles have addressed the relative amplitudes of the β orbit oscillations and its side bands experimentally and theoretically,[32,33] however, there is no consensus on these amplitudes.

One of the anomalies we found was that the amplitude of the β frequencies normalized by that of the α orbit from our measurements is higher than in most other SdH measurements using traditional four lead techniques. Hill[34] saw results similar to ours measuring the SdH effect in a 46.3 GHz cavity. We believe β frequencies could be enhanced for one of two reasons. First, in a microwave cavity or in our coils, the currents in the sample are driven by an oscillating magnetic field and not contacts on the surface of the sample. It is possible that the magnetically driven currents tend to be more confined to the conducting $(a-b)$ planes than currents coming through leads, resulting in cleaner magnetic breakdown. The second possibility is that stresses due to the leads cause local defects that interfere with the larger breakdown orbits.[35] When similar measurements are made with the TDO method, the samples have no leads and less stress. A fuller discussion of these phenomena will be published in an upcoming article.

It is clear that high quality quantum oscillations can be measured with the TDO technique in pulsed fields. We now argue that we are measuring oscillations in resistivity, the SdH effect, and not susceptibility [the de Haas–van Alphen effect (dHvA)]. We support this claim first with evidence that we see the same quantum oscillations in the amplitude and frequency of our TDO, and the amplitude is a measure of the Q of the circuit which is inversely proportional to the resistivity. And second, because we can estimate the size of the dHvA effect and calculate the resulting amplitude of the frequency oscillations. These predicted dHvA oscillations are much smaller than the signal we measure, suggesting that we are measuring the SdH effect. The calculation is below.

When a magnetic material is placed inside an inductor, the magnetic field inside the inductor is increased by a factor equal to the susceptibility as shown by the equation

$$B=\mu_0 H(1+\chi r),$$

consistent with case (1) in Sec. II. Because the inductance of a coil is proportional to the strength of the magnetic field contained in the coil, the inductance is changed by the same factor $(1+\chi r)$. We can estimate the size of the dHvA effect by using a result from Shoenberg,[36] which shows that the oscillatory part of the susceptibility $\tilde{\chi}=10^{-5}$ or the measurements of the Naughton group[37] in an organic conductor which give $\tilde{M}=200$ A/m at 17 T . The Naughton results translate to a $\tilde{\chi}=1.5\times10^{-5}$ and are consistent with the Shoenberg result, so we will use the Naughton result for our calculation. For the experiment above $f_0=$ 54 MHz and $r=0.6$. The amplitude of the oscillations in the frequency of the tank circuit due to the dHvA effect can be calculated from the formula

$$\frac{\Delta f}{f_0}=\frac{1}{2}\chi r,$$

based on the familiar equation $\omega_r=1(/LC)^{1/2}$.

Using the numbers above Δf = 243 Hz and the real magnitude is probably smaller because the dHvA effect measured by Naughton was in a compound that has particularly large amplitude oscillations.[38] The amplitude of the oscillations we measured, at the same field, were at least an order of magnitude greater than this estimate of the dHvA effect, so we attribute the frequency oscillations to eddy currents induced in the sample, which have magnitudes that are proportional to the changes in the resistivity of the sample. Also, the magnitude of the oscillations are consistent with calculations of eddy currents induced by a TDO in infinite plane conductors.[14] This shows that the oscillations we measure are a result of the SdH effect. Given the range of the absolute values of the resistivity of the organic samples that we study, the SdH effect will always dominate over the dHvA effect in TDO measurements.

VI. DISCUSSION

We have demonstrated a contactless method for measuring many conductive, magnetic, and penetration depth properties of materials at very high magnetic fields by using a tunnel diode oscillator in a pulsed magnetic field. Many improvements will enhance this TDO method in the future. We have already used a rotating platform successfully for the experiments described in this article. Different lead configurations, such as the strip line used in explosive magnetic field experiments,[39] will reduce the pickup of noise and the dB/dt of the magnet pulse increasing the signal to noise ratio. One disadvantage of the double coil method is that the coil tapping suggested by Van Degrift[16] is difficult because four matched coils are needed. But, just as with the two coils, lithographic processes will make it easy to match any number of coils. We plan to test many of these improvements in the near future.

ACKNOWLEDGMENTS

The authors acknowledge R. Markiewicz for helpful discussions. They thank the NHMFL and the staff at Los Alamos, in particular M. Pacheco for support of these experiments. They appreciate the help of their instrument maker J. Norton for his skill constructing some of the apparatus. They also acknowledge support from the NSF and the PRF for these experiments.

[1] F. Herlach and N. Miura, in *Strong and Ultrastrong Magnetic Fields*, edited by F. Herlach (Springer, Berlin, 1985), Vol. 57, p. 247.
[2] M. van der Burgt, P. Thoen, F. Herlach, F. M. Peeters, J. J. Harris, and C. T. Foxon, Physica B **177**, 409 (1992).
[3] T. Sakakibara, T. Goto, and N. Miura, Rev. Sci. Instrum. **60**, 444 (1989).
[4] C. Boghosian, H. Meyer, and J. E. Rives, Phys. Rev. **146**, 110 (1966).
[5] C. C. Agosta, S. Ivanov, Z. Bayindir, T. Coffey, N. D. Kushch, E. B. Yagubskii, T. Burgin, and L. K. Montgomery, Synth. Met. **103**, 1795 (1999).
[6] G. J. Athas, J. S. Brooks, S. J. Klepper, S. Uji, and M. Tokumoto, Rev. Sci. Instrum. **64**, 3248 (1993).
[7] J. G. Brisson, J. C. Mester, and I. F. Silvera, Phys. Rev. B **44**, 12453 (1991).
[8] A. Carrington, R. W. Giannetta, J. T. Kim, and J. Giapintzakis, Phys. Rev. B **59**, 14173 (1999).
[9] R. B. Clover and W. P. Wolf, Rev. Sci. Instrum. **41**, 617 (1970).

Downloaded 27 Aug 2001 to 140.232.2.33. Redistribution subject to AIP license or copyright, see http://ojps.aip.org/rsio/rsicr.jsp

[10] F. M. Ellis and L. Li, Phys. Rev. Lett. **71**, 1577 (1993).
[11] S. G. Gevorgyan *et al.*, Rev. Sci. Instrum. **71**, 1488 (2000).
[12] J. D. Gillaspy, I. F. Silvera, and J. S. Brooks, Phys. Rev. B **40**, 210 (1989).
[13] S. Sridhar, B. Maheswaran, B. A. Willemsen, D. H. Wu, and R. C. Haddon, Phys. Rev. Lett. **68**, 2220 (1992).
[14] A. Omari and A. F. Khoder, Cryogenics **33**, 1098 (1993).
[15] Y. Finkelstein and E. Polturak, Eur. J. Phys. **14**, 23 (1992).
[16] C. T. VanDegrift, Rev. Sci. Instrum. **46**, 599 (1975).
[17] C. T. VanDegrift and D. P. Love, Rev. Sci. Instrum. **52**, 712 (1981).
[18] S. G. Gevorgyan, G. D. Movsesyan, A. A. Movsisyan, V. T. Tatoyan, and H. G. Shirinyan, Rev. Sci. Instrum. **69**, 2550 (1998).
[19] J. G. Brisson and I. F. Silvera, Rev. Sci. Instrum. **57**, 2842 (1986).
[20] A. Carrington, I. J. Bonalde, R. Prozorov, R. W. Giannetta, A. M. Kini, J. Schlueter, H. H. Wang, U. Geiser, and J. M. Williams, Phys. Rev. Lett. **83**, 4172 (1999).
[21] J. A. Osborn, Phys. Rev. B **67**, 351 (1945).
[22] A. L. Schawlow and G. E. Devlin, Phys. Rev. **113**, 120 (1959).
[23] *The 1989 ARRL Handbook for the Radio Amateur*, 66th ed. (The American Radio Relay League, Inc., 1989).
[24] D. Xu, S. K. Yip, and J. A. Sauls, Phys. Rev. B **51**, 16233 (1995).
[25] M. W. Coffey and J. R. Clem, Phys. Rev. Lett. **67**, 386 (1991).
[26] L. D. Landau and E. M. Lifshitz, *Electrodynamics of Continuous Media* (Pergaman, Oxford, 1960).
[27] O. Klein, S. Donovan, M. Dressel, and G. Gruner, Int. J. Infrared Millim. Waves **14**, 2423 (1993).
[28] J. Schillig, H. Boenig, M. Gordon, C. Mielke, J. Martin, D. Rickel, J. Sims, and R. Williams, IEEE Trans. Appl. Supercond. **10**, 526 (2000).
[29] J. R. Sims, H. J. Boenig, L. J. Campbell, D. G. Rickel, J. D. Rogers, J. B. Schillig, and H. J. Schneider-Muntau, *Proceedings of the 15th International Conference on Magnet Technology, Beijing, China, 1997* (Science Press, Beijing, 1998), Part I, pp. 635–641.
[30] O. Klein, K. Holczer, G. Gruner, J. J. Chang, and F. Wudl, Phys. Rev. Lett. **66**, 655 (1991).
[31] C. Agosta and group (unpublished).
[32] J. H. Kim, S. Y. Han, and J. S. Brooks, Phys. Rev. B **60**, 3213 (1999).
[33] N. Harrison, J. Caulfield, J. Singleton, P. H. P. Reinders, F. Herlach, W. Hayes, M. Kurmoo, and P. Day, J. Phys.: Condens. Matter **8**, 5415 (1996).
[34] S. Hill, S. Uji, P. S. Sandhu, J. S. Brooks, and L. Seger, Synth. Met. **86**, 1955 (1997).
[35] N. B. Sandesara and R. W. Stark, Phys. Rev. Lett. **53**, 1681 (1984).
[36] D. Shoenberg, *Magnetic Oscillations in Metals* (Cambridge University Press, Cambridge, 1984).
[37] I. J. Lee, V. N. Laukhin, D. K. Petrov, M. Chaparala, N. Kushch, and M. J. Naughton, Synth. Met. **85**, 1559 (1997).
[38] V. N. Laukhin *et al.*, Physica B **211**, 282 (1995).
[39] B. E. Kane *et al.*, Rev. Sci. Instrum. **68**, 3843 (1997).

Downloaded 27 Aug 2001 to 140.232.2.33. Redistribution subject to AIP license or copyright, see http://ojps.aip.org/rsio/rsicr.jsp