# Development of a Vibrating Reed Technique to Measure Young's Modulus of Janus Materials

Lauren Schatz*, Mackenzie W. Turvey, and Mark W. Meisel

*Department of Physics and NHMFL, University of Florida, Gainesville, FL 32611-8440*

July 30, 2014

## Abstract

Janus type multiferroic nanofibers are of special interest because they are composite materials of two hemi-cylinders of Barium Titanate ($BaTiO_3$), and Cobalt Ferrite ($CoFe_2O_4$). A magnetic phase transition is seen when measuring the change in magnetism as a function of temperature of these fibers at the Curie temperature of Barium Titanate.[1] To determine whether or not this transition is caused by the structure of the material we seek to develop a vibrating reed technique to measure the Young's modulus of the nanofibers, but it is not yet fully realized. A vibrating reed at its simplest is a rectangular reed fixed at one or both ends and driven at various frequencies to find its resonance by a driving force. The reed consists of a brass strip driven by capacitively coupled copper electrodes. Brass is used to calibrate the system, as the Young's modulus is already known. To determine the characteristics of the resonance curve, a quartz tuning fork is analyzed through the use of a lock-in amplifier. The circuit was then adapted to the reed, but no resonance has yet been detected. Detection was attempted by amplitude modulation of a radio frequency carrier wave with results to be determined. A DC bias and low pass filter circuit was developed to filter out noise and encourage resonance. The results were inconclusive and further work is required to develop the reed.

*Department of Physics, University of California Santa Cruz,
1156 High Street, Santa Cruz, CA 95064

## Introduction

The elastic properties of a material can offer important insights into its intrinsic structure. The Young's modulus is a measurement of stress that is used to characterize the elasticity of a material. This characterization is applicable to different material geometries, for instance Tsukamoto *et. al.*[2] developed a technique to measure the Young's modulus of thin films to determine variations in crystallinity, orientation, and quality of thin film samples.[2] In this project we seek to develop a method of measuring the Young's modulus of Janus type multiferroic nanofibers to determine the mechanism behind a magnetic phase transition. Janus type materials are composite materials that consist of two or more parts that are made of different materials or have different characteristics. The nanofibers are hemi-cylinders consisting of Barium Titanate ($BaTiO_3$), and Cobalt Ferrite ($CoFe_2O_4$). A magnetic phase transition is seen at the Curie temperature of Barium Titanate when measuring the change in magnetism as a function of temperature of these fibers.[1] By measuring the Young's modulus of these fibers we hope to characterize their internal structures and determine if this phase transition is caused by its structure or a magnetic coupling between the two materials.

The mechanical resonance of a material is dependent on its geometrical structure as well as its elastic properties.[3] A straightforward method for measuring the resonant frequency of a material is the vibrating reed technique. A vibrating reed at its simplest is a rectangular reed fixed at one or both ends and driven at various frequencies to find its resonance by a driving force. In vibrating reeds that utilize capacitive coupling as a way of drive and detection, the signal is weak due to the restrictions on the size of the electrodes. The larger the size of the electrodes, the more likely the electrodes are to couple to each

other rather than the reed, resulting in large cross talk noise. However if the electrodes are too small, the driving force will not be significant enough to oscillate the reed. The instrument we seek to develop will use two electrodes, one to drive and one to detect the oscillations of the reed through capacitive coupling and an alternating current driving force. By determining the resonant frequency of the reed, the Young's modulus can then be calculated. Brass is used for the initial reed to calibrate the instrument. Future work will adapt Janus materials into the instrument as the reed.

A major challenge in designing a reed is the elimination of noise in the system. Sources of noise come from mechanical vibrations, unwanted coupling of electronic components, and interference from outside signals. To eliminate crosstalk in the circuitry, Aiello et al.[4] developed an optical method of detecting the vibrations of the reed using a metallurgical microscope and refrigerated cold stage. Berry et al.[5] used a vibrating reed comprised of two pairs of electrodes, one to drive and one to detect. To eliminate cross talk, an electrostatic screen was placed between the two pairs. Additionally, the experiment was placed under vacuum to eliminate air damping.[5] To reduce noise in our system we have offset the electrodes to reduce cross talk, and eventually enclosed the reed in a metal box to shield it from the environment. Future work may employ some techniques used by other research groups to further shield the experiment. A lock-in amplifier is employed to measure the voltage as a function of frequency to determine the resonant frequency.

In the Experimemtal Methods section the topic of tuning fork analysis is introduced to characterize resonance peaks and provide an example of the expected signal from the vibrating reed. The theory behind tuning forks is discussed, and the circuit diagram as well as specific parameters used in a primary experiment is given. In the second half of this

section the vibrating reed theory, circuit diagrams, and experimental procedures are defined. In the Results and Discussion section results for the tuning fork analysis are shown and explained. Null results from the vibrating reed circuits are given after. The Conclusion and Future Work section future improvements for this instrument are suggested.

## Experimental Methods

### Part One: Tuning Fork

The first stage of this project has been to examine the resonance peak of a quartz tuning fork using a lock-in amplifier. The oscillation of the tuning fork in response to a given driving force is described by the equation

$$\frac{md^2x}{dt^2} + \frac{Bdx}{dt} + kx = F_0 \cos(\omega t + \delta), \tag{1}$$

where $x$ is the displacement to the tine relative to its resting position, $m$ is the mass of a tine, $B$ is the dampening coefficient, $k$ is the spring constant, and $F$ is the amplitude of the AC driving force. The resonant frequency of the tuning fork is thus defined as $f = \sqrt{k/m}$.[6] A particular quantity of interest is the quality factor of the tuning fork. A quality (Q) factor of a resonant peak is defined as the resonant frequency divided by the full width half maximum of the curve. High Q factors are the equivalent to a long decay time of the resulting wave. The expected curves for resonance peaks are Lorenzian curves, and a high Q Lorenzian has the features of a very narrow and high peak. A low quality resonance will have a short decay time, and a very broad and low curve. The resonant curve is also affected by the amount of driving force, and how long the wait time is between consecutive data points taken. The oscillator can be over or under driven resulting in a loss of quality as well as signal distortion. If the time between measurements is shorter than the settling time, then the signal will be distorted.

To analyze the resonance curve of the tuning fork, a circuit in conjunction with a LabView program was used.[6] The frequency generator applies an AC signal to drive the tuning fork. The same signal output is fed into the Lock-in's reference input, which will be used when computing the time average of the signal. The signal from the tuning fork is fed into the negative feedback loop of the operational amplifier (Op Amp), over which the lock-in reads the signal and averages it with the reference frequency. The program sweeps through a frequency range at a voltage set by the user. Additionally, the user sets the number of steps and intervals between steps. At each step the program extracts the data of the *X,Y, R*, (which are in the units mV) and Phase (which has the units of degrees) channels from the lock-in amplifier and graphs them against frequency.[6] The *X* and *Y* outputs display the real and imaginary components of the impedance of the circuit given by the standard trigonometric equations

$$X = Rcos(\theta), \text{and} \tag{2}$$

$$Y = Rsin(\theta), \tag{3}$$

where$R$ is the magnitude of the total voltage amplitude of the circuit, and the phase is calculated by

$$\theta = \arctan\left(\frac{Y}{X}\right). \tag{4}$$

The program was modified to write these data points to a separate file.

*Stanford Research Systems SR 530 Lock-in Amplifier*

Lock-in amplifiers exploit the orthogonality of sinusoidal functions to extract a single frequency signal from a noisy environment. The lock-in uses a reference signal of frequency $\omega_1$, multiplies by the incoming signal of frequency $\omega_2$, and integrates over a time

much greater then the period of the two functions. The effective result produced by a lock-in amplifier is a DC signal with any signal not at the reference frequency being strongly attenuated.[7]

*Circuit Diagram: Tuning Fork*

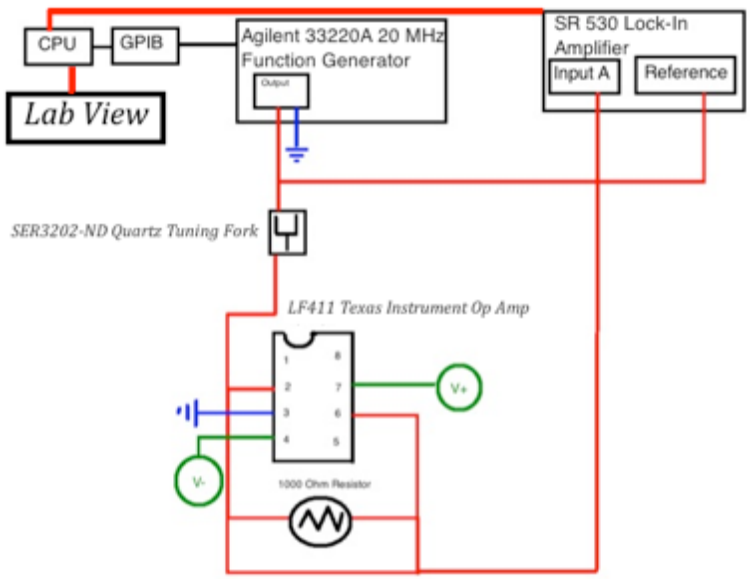


**Figure 1:** Tuning Fork Circuit.
A sinusoidal voltage from the frequency generator drives the tuning fork to oscillation. The oscillating signal is sent through the negative feedback loop generated by the Op Amp and is measured by the lock-in amplifier over a 1 kΩ resistor. The computer through a lab view program changes the output frequency and reads in the results from the lock-in amplifier. [6]

*Procedure*

An initial scan was performed from 32.700 to 32.800 kHz to locate the resonance peak and compare it against the manufacturer's specification of 32.768 kHz. After confirming that the resonance of the tuning fork was near that of the manufacturer's quote, four scans were performed to determine the characteristics of resonance under different conditions. Each scan was 200 data points from 32.760 to 32.770 kHz with variable drive voltage and time intervals between data points. A 100 mS time constant was set on the

lock-in amplifier, and the reference was set to 1x the reference frequency. The sensitivity on the lock-in was set to the most sensitive allowed before overloading.

**Table 1**. Experiment parameters

| Name | Drive Voltage | Time Interval Between Data Points | Lock-in Sensitivity |
|---|---|---|---|
| Test 1 | 10 mV | 10 s | 20 mV |
| Test 2 | 10 mV | 0.5 s | 20 mV |
| Test 3 | 1 V | 10 s | 500 mV |
| Test 4 | 1 V | 0.5 s | 500 mV |

## Part Two: Vibrating Reed

A three dimensional model of the vibrating reed that was developed and tested is shown in Figure 2. The reed is housed in a triangular plastic base with screw holes for the electrodes offset by a quarter inch to lessen the effects of cross talk. The electrodes are copper blocks that are fastened to screws allowing the distance of the reed to the electrodes to be adjusted. The reed consists of a rectangular strip of brass fastened to perfboard board by epoxy, and then a mechanical clamp is used to clamp it to the base. The reed used has a length of 0.0175 m, and a thickness of 0.000254 m. The speed of sound in brass is 3576.408 m/s, but there is a discrepancy on this parameter as the speed depends on how the manufacturer made the brass because it is an alloy. For a rectangular reed, the geometrical boundary conditions give rise to the relation for the resonant frequency

$$f = \frac{\pi c t}{8\sqrt{12}l^2} B_n^2. \tag{5}$$

Where $c$ is the speed of sound in the material, $t$ is the thickness of the material, $l$ is the length of material. $B_n$ is a numerical constant, where $B_n = 1.194, 2.988 \ldots$ .[8] The resonant

frequency of a material is related to its Young's modulus. For a rectangular bar the Young's modulus is

$$E = 0.9465\left(\frac{mf^2}{b}\right)\left(\frac{l^3}{t^3}\right), \tag{6}$$

where $E$ is the Young's modulus, $b$ is the width of the bar, $m$ is the mass of the bar.[3] The predicted resonant frequency of the reed is

$$f = \frac{\pi ct}{8\sqrt{12}l^2}B_n^2 = \frac{\pi\left(\frac{3576.408m}{sec}\right)(0.000254m)}{8\sqrt{12}*(0.0175m)^2}(1.194)^2 = 479.4\ Hz.^2 \tag{7}$$

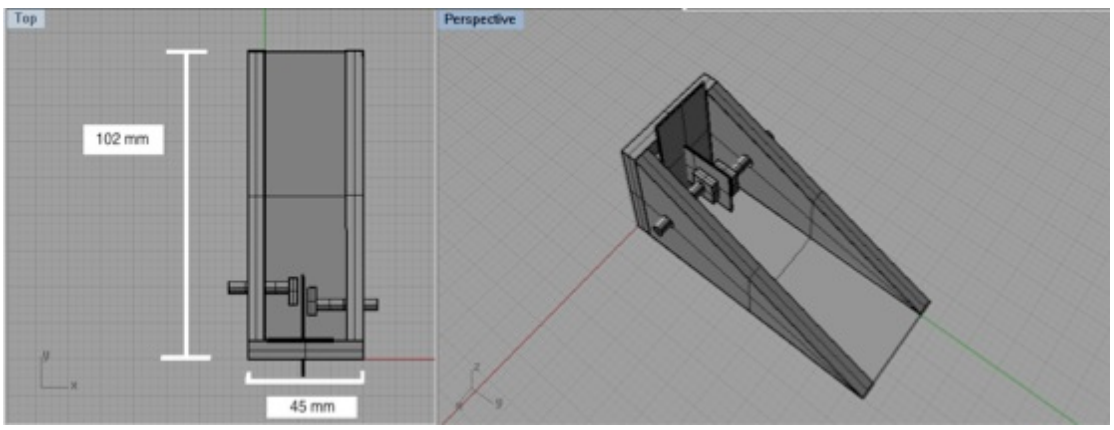


Figure 2 3D Model done in Rhinoceros of the vibrating reed and base. Clamp is not shown.

To drive the reed, an electric force is applied onto the reed by the electrodes. The electric force on a charge is defined as

$$F = qE, \tag{8}$$

where $q$ is the charge, and $E$ is the electric field. The electric field for a capacitor in the infinite plane approximation is

$$E = \frac{\sigma}{\epsilon} = \frac{q}{\epsilon A}, \tag{9}$$

where σ is the surface charge density, ε is the permittivity (which in this case is the permittivity of air), and $A$ is the area of the plates. The capacitance of this system is

$$C = \frac{A\epsilon}{d}. \tag{10}$$

Plugging this into the definition of force gives

$$F = qE = \frac{qV}{d} = \frac{CV^2}{d} = \frac{A\epsilon V^2}{d^2}, \tag{11}$$

which gives rise to an acceleration of the reed of

$$a = \frac{F}{m} = \frac{A\epsilon V^2}{d^2 * \boldsymbol{\rho} * \mathbf{Volume}}. \tag{12}$$

It is this force, if strong enough, that will oscillate the reed. For this reed the capacitance was calculated to be 7 pF and measured using a BK Precision 878B LRC meter to be approximately 5 pF. Additionally, the voltage across a capacitor is given by $V = q/C$. If the capacitance changes sinusoidally (due to the oscillation of the reed), the resulting voltage, and hence the resulting signal, is $V = q/Csin(\omega t)$. In reality the voltage response is more complicated because the driving voltage is periodic as well.

When exciting the reed using a sinusoidal voltage, the reed will be attracted and relaxed twice per cycle resulting in a signal that is twice the frequency of the driving frequency.[2] The driving voltage is sinusoidal, so it will apply both a positive and negative charge once per cycle. When the voltage applies a positive charge on the electrode, the reed will respond with a negative charge and be attracted. When the voltage becomes negative, the reed will invert charge and become attracted again. Therefore in order to properly detect the signal, the reed should be driven at a frequency that is half the resonant frequency. On the lock-in amplifier, the detection setting should be set to twice the reference frequency to detect the expected value of the resonant frequency.

*Circuit Diagram A: Op Amp Circuit*

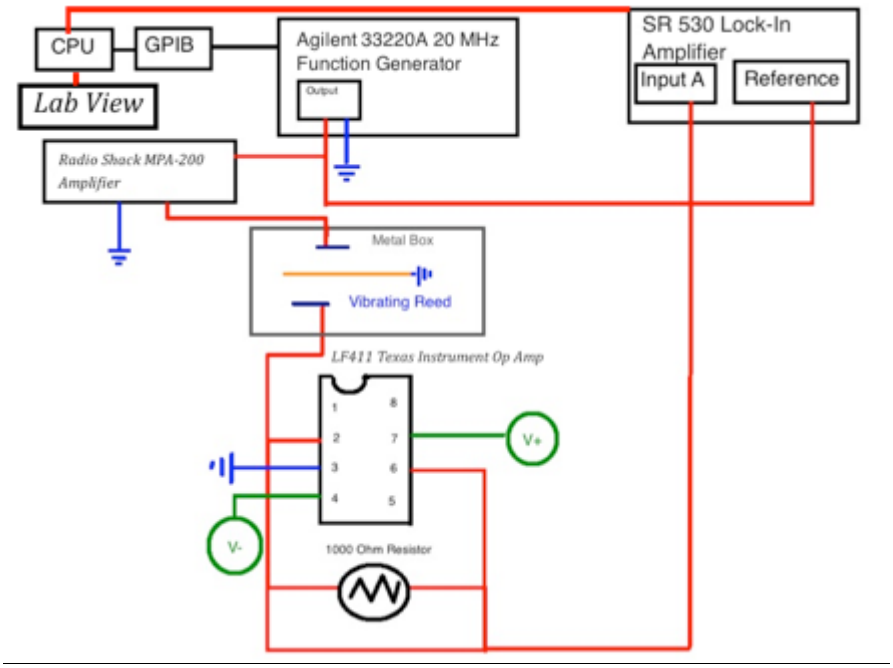


Figure 3 Op Amp circuit.
This is the same circuit as in Figure One, but with the tuning fork replaced with the brass reed. An audio frequency amplifier has been added to amplify the voltage of the signal from the frequency generator.[8]

*Procedure*

A 200-point scan was performed from 50 Hz to 600 Hz at 12-second intervals. The lock-in was set to double reference frequency detection, and with a sensitivity of 20 mV. The time constant was set to 1 second. The output voltage of the frequency generator was set to 1 volt and was amplified by an audio amplifier by 50 dB to a voltage of about 315 V. To reduce the noise in the system, the reed was sealed in a metal box to shield it from the environment and unwanted electromagnetic interference. The electrodes were placed as close to the reed as possible on the order of tenth of a millimeter away.

*Circuit Diagram B: Radio Frequency Carrier Wave.*

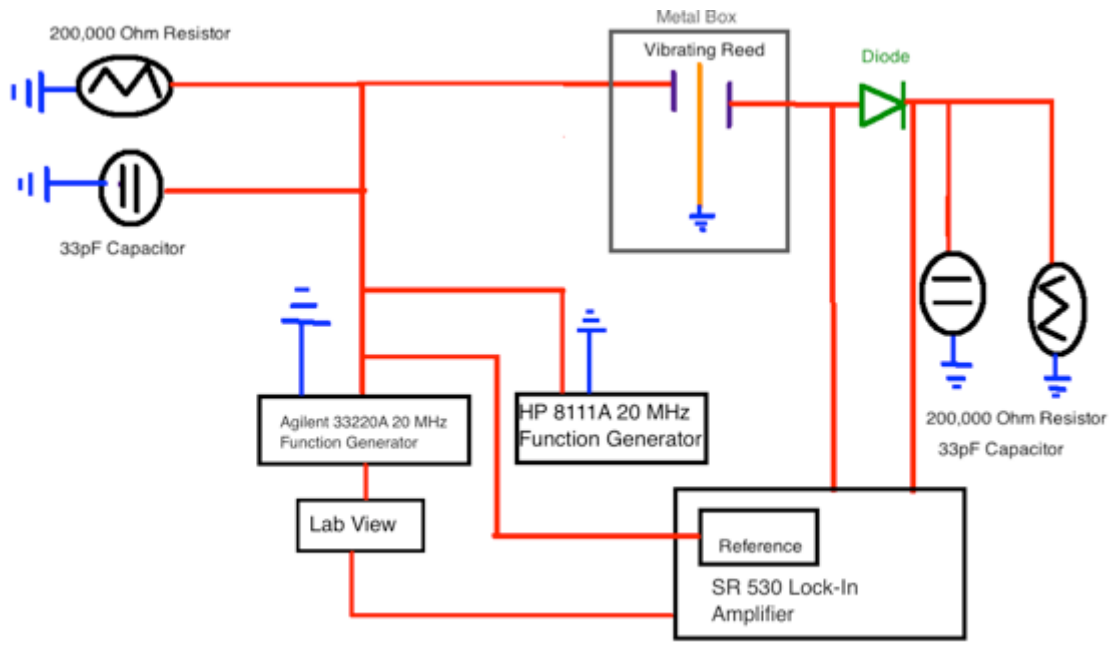


Figure 4 Radio Frequency Carrier Wave Circuit.
The audio signal and radio signal from the function generators couple and transmit across the reed. A R.C. circuit is placed before the reed to prevent radio frequencies from entering the audio frequency function generator. The two signals are decoupled by the diode and second R.C. component.[8]

The impedance of a capacitor is defined as

$$Z = \frac{1}{i\omega C}. \tag{13}$$

To decrease the impedance and increase the transfer of voltage from the electrodes to the reed, a radio frequency is introduced as a carrier wave for the audio frequency generated by the function generator. The resulting signal looks like a wave packets consisting of the radio frequency modulated by the audio frequency. The diode and RC circuit filters out the radio frequency, ideally returning only the signal from the reed. [8] A 550-point scan was performed from 50 to 600 Hz with a drive voltage of 3 V. The radio frequency generator (HP 8111A) was set to 9.85 MHz and 1 V drive. The lock-in was set to 100 μV sensitivity and a 1 s time constant.

*Circuit Diagram C: DC Bias and Low Pass Filter*

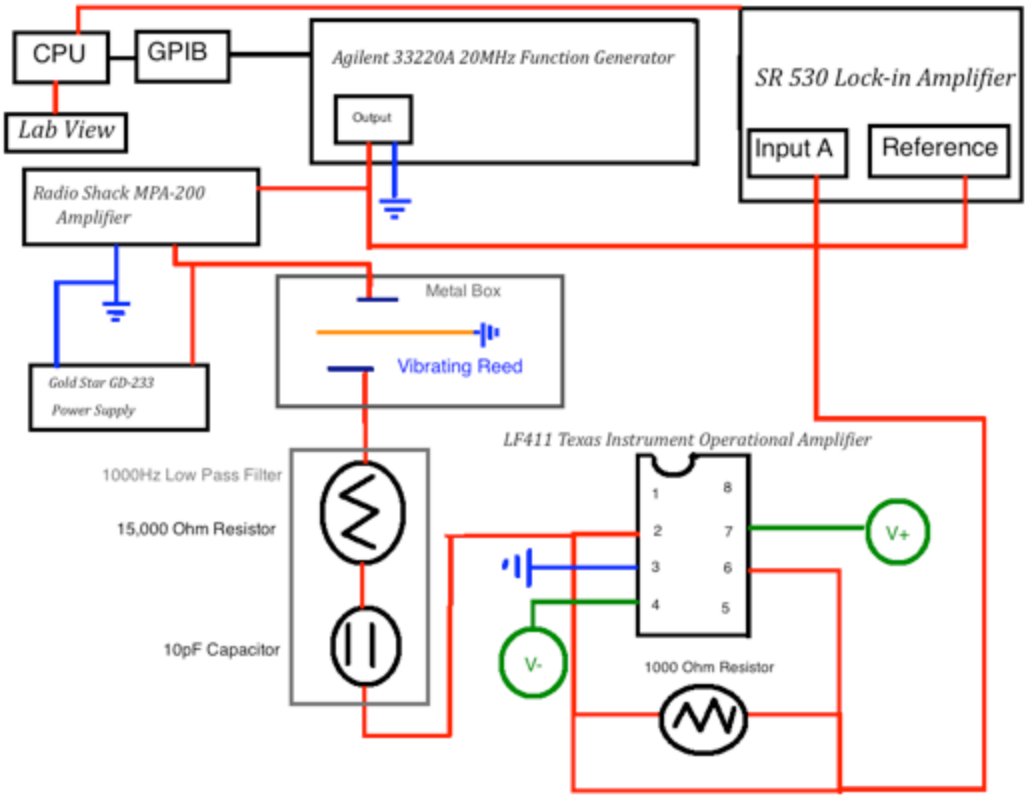


Figure 5 DC Bias and Low Pass filter circuit diagram.
The D.C. bias increases the attraction of the reed to the electrodes, and the low pass filter attenuates signals above 1 kHz.

A DC bias is introduced into the Op Amp circuit to add to the attraction of the reed to the electrodes. Additionally, a 1 kHz low pass filter has been added to attenuate noise in the system. A 450-point scan was performed from 50 Hz to 1 kHz with the audio frequency at 1 V. A 1 V DC bias was applied and both signals were amplified by 5 dB. To increase the amplification a second test was performed with the DC bias removed, and only the 1 V AC signal amplified by 50dB.

## Results and Discussion

### Part One: Tuning Fork

A clear resonance signal is seen in the 10 mV, 10-second trial centered 32.76607 kHz. To calculate the Q value of these results, a residual phase shift of 6° was corrected out using the transformations:

$$x = y' \sin(\phi) + x' \cos(\phi)\,, \text{and} \tag{14}$$

$$y = y' \cos(\phi) - x' \sin(\phi), \tag{15}$$

where $x'$ and $y'$ are the untransformed coordinates, and $\phi$ is the residual phase shift. A single peak Lorentzian fit was performed in Origin to calculate the quality factor, which for this peak was 7.2 x $10^4$. Additionally the phase shows a characteristic phase shift from negative 80° to positive 80°. When an oscillator goes through a resonance it is expected that it will have a full 90° phase shift, suggesting that it is possible to get an even high quality factor.

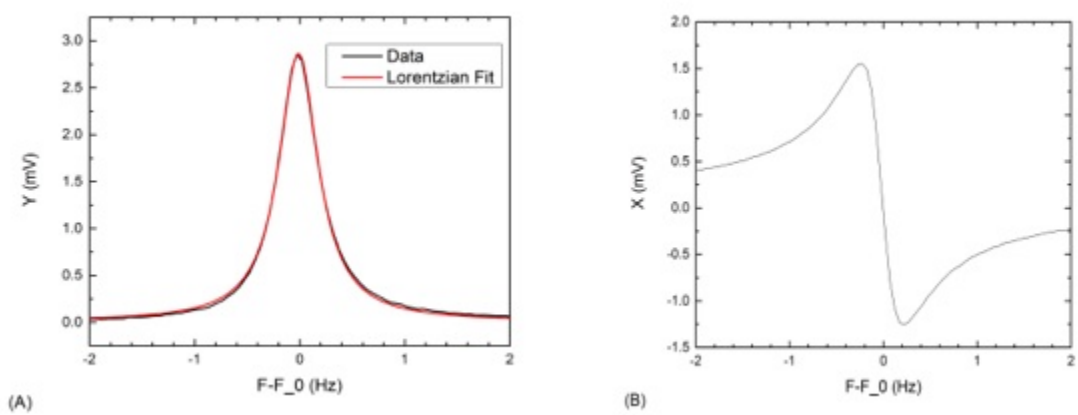


Figure 6 Graphs of the Y and X lock-in outputs versus frequency minus the resonant frequency F_0. (A) The Y curve corresponds to the real absorption of current through the oscillator, and (B) the X curve represents the complex dispersion component. [9]

The four tests depict the resonance curve under different conditions. The light blue graph in Figures Four and Five represents the features of an oscillator being over swept and overdriven resulting in a distorted resonance curve. The dark blue line is the response when driving the oscillator too hard as the shape of the curve is distorted. A dip is seen suggesting a possible short circuit or overload of the lock-in. The green line is the signal when the circuit is being driven at the correct voltage, but swept too fast. The signal is weak and unrecognizable from noise in the system. The red line is the graphs from Figure 6 (A) and (B) compared here against the other trials. An additional circuit was built utilizing a voltage divider to test the oscillator when being under driven, but the drive was so weak that the tuning fork failed to resonate and no signal was seen.

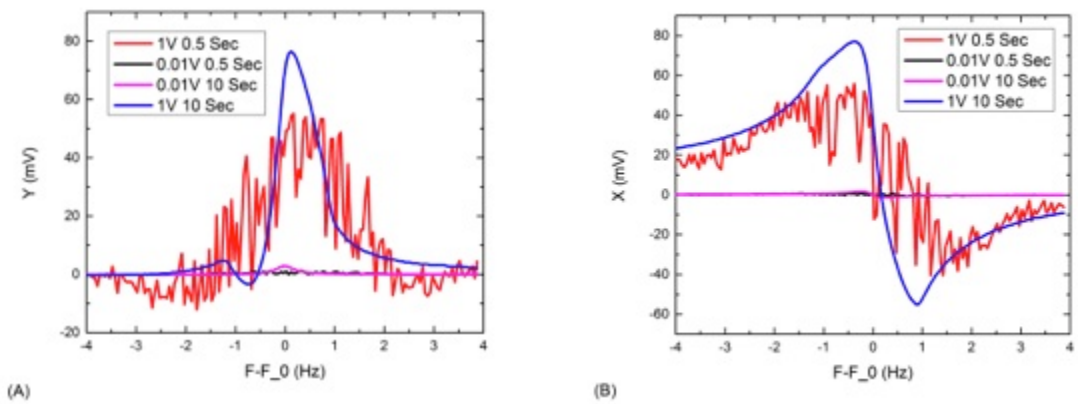


Figure 7 Plots comparing the Y vs. F- F_0; and X vs. F- F_0 data of the four tests.

The characteristic shape of a resonance curve is a Lorentzian whose width and height depend on the quality factor of the resonator. The clarity of the measurement depends on the conditions driving the oscillator. Not all oscillators will have such a defined curve as the tuning fork. The fork is special in that it is sealed under vacuum in a metal canister and made of quartz that has a high quality of resonance. For oscillators made of

different materials and not well protected, the resonance curve will be distorted and overlaid with noise. Combined with overdriving, under driving, or sweeping too fast the signal could be distorted beyond recognition.

**Part Two: Vibrating Reed**

To recover the fact that the reed is attracted and relaxed twice per cycle, the frequency data points (x-axis) have been multiplied by a factor of 2. The frequency that the lock-in reads out to the LabView program is the same frequency as the reference. The scans were performed detecting at twice the reference frequency, therefore the actual frequencies in the data are twice that of the reference.

*Circuit A*

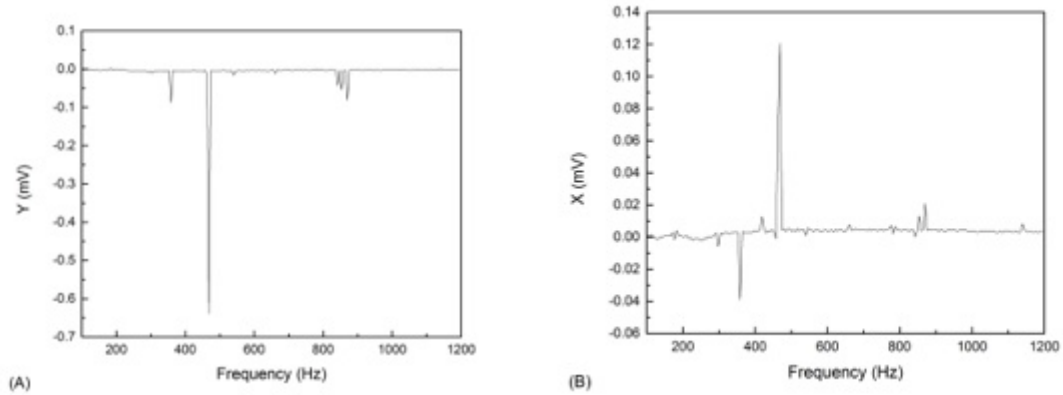


Figure 8 Circuit A Results
No resonance seen. Spikes on graphs represent noise and harmonics of the 60 Hz AC signal.

No discernible resonant peak was seen. Due to the low quality of resonance expected from the brass, the resonant peak should be broad and low. In this scan only sharp, narrow peaks characteristic of noise and the 60 Hz AC resonances was detected.

*Circuit B*

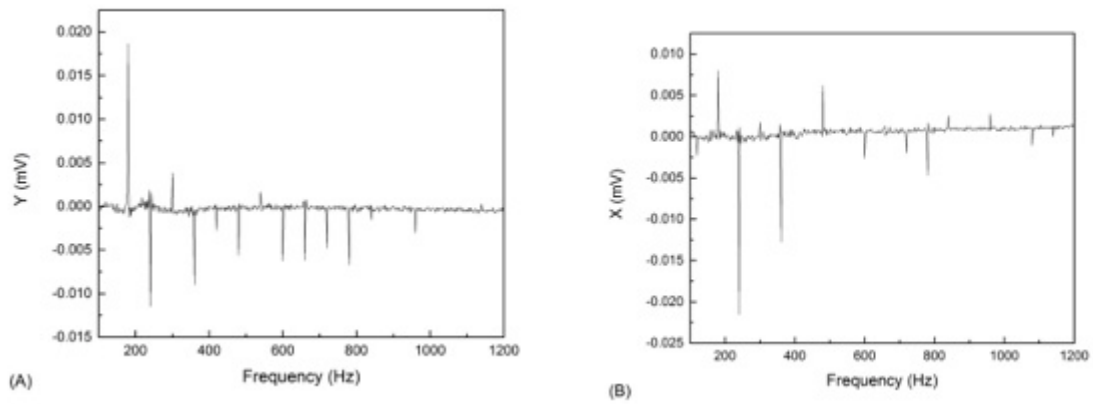


Figure 9 Circuit B Results
No resonance seen. Spikes on graphs represent noise and harmonics of the 60 Hz AC signal.

No resonance was detected. Like the Circuit A only 60 Hz harmonics and noise was detected.

*Circuit C*

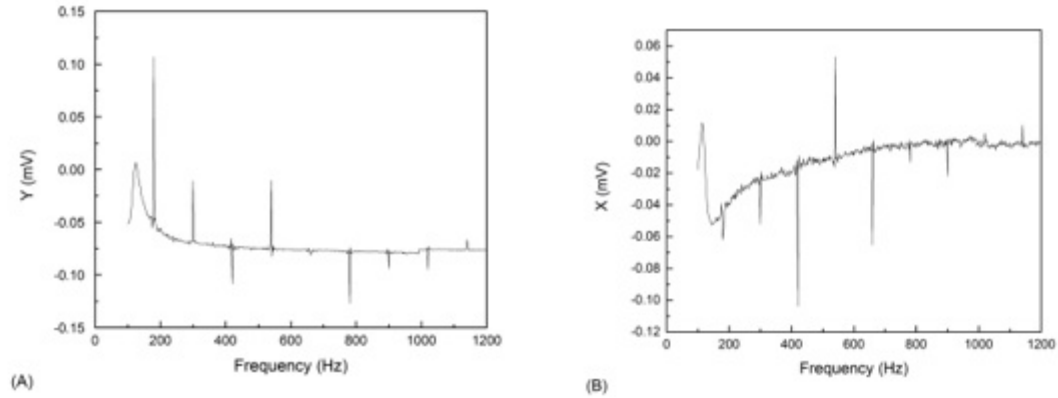


Figure 10 Circuit C No DC Bias Results
No resonance seen. Spikes on graphs represent noise and harmonics of the 60 Hz AC signal. A broad curve is seen between 100 to 200 Hz, but this is also a 60 Hz harmonic which was verified in a scan from 1 to 200 Hz not discussed in this paper.

No resonance was seen in the DC bias circuit. Due to the low amplification of the signal the reed was not driven at a voltage strong enough to vibrate it. The subsequent test removing the DC bias and increasing the amplification of the signal also produced a null result. Although a broad resonance peak is shown in the graphs above, a further test scanning from 1 to 200 Hz showed that it was a 60 Hz harmonic resonance.

## Conclusions and Future Work

The lack of signal can be attributed to the reed not being driven hard enough. The force applied is dependent on the distance of the reed to the electrodes, the voltage applied, and the capacitance between the two electrodes. Having minimized the distance of the electrodes, and maximized the voltage applied, the problem lies in the small capacitance. Because the capacitance is so low (~5 pF), the force applied to the reed is very small, and hence the signal would be extremely small as well. The lock-in amplifier is sensitive enough to detect extremely small voltages on the order of micovolts and nanovolts, but if the noise is large, it limits the sensitivity settings, as the lock-in will overload. Therefore any signal from the reed would be lost or undetectable in a noisy environment. Future work on the vibrating reed should be focused on increasing the sensitivity of this system. Putting the system under vacuum would eliminate damping of the reed, and cooling the system would reduce mechanical noise.

Additionally stronger methods of clamping the reed should be investigated. After returning to the literature it was noted that almost all publications on vibrating reed instruments detail their clamping methods to some extent. If the reed is not clamped well

the resonant frequency of the reed could be shifted, or the reed could fail to resonate all together.

**Acknowledgements**

This work was supported in part, by the National Science Foundation and the University of Florida under grants DMR-1156737 (UF REU), DMR-1157430 (NHMFL), and DMR-1202033 (M.W.M). A special thank you to Mackenzie Turvey for his mentorship throughout this program and all that he has taught me.

**References**

1. Starr, J. D., and J. S. Andrew. "Janus-type bi-phasic functional nanofibers." Chem. Commun 49.4151 (2012).
2. Tsukamoto, Y., H. Yamaguchi, and M. Yanagisawa. "Mechanical properties of thin films: Measurements of ultramicroindentation hardness, Young's modulus and internal stress." *Thin Solid Films* 154.1-2 (1987): 171-81.
3. Swarnakar, A. K., S. Gimenez, S. Salehi, J. Vleugels, and O. Van der Biest. "Recent Advances in Material Characterization using the Impulse Excitation Technique." *Key Engineering Materials* 333 (2007): 235-38.
4. Aiello, W. A., C. R. Wolfe, and W. A. Little. "Simplified Vibrating-Reed Technique for the Measurement of the Temperature Dependence of Young's Modulus of Small Samples." *Rev. Sci. Instrum.* 54.5 (1983).
5. Berry, B. S., "Dynamic Modulus Measurements and Materials Research". Dynamic Elastic Modulus Measurements in Materials, ASTM STP 1045. Alan Wolfenden, editor. American Society for Testing and Materials. Philadelphia 1990.
6. Nicks, S., and M. W. Meisel. "Exploration of Quartz Tuning Forks as Potential Magnetometers for Nanomagnets. 2012.
7. Libbrecht, K G., E D. Black, and C M. Hirata. "A basic lock-in amplifier experiment for the undergraduate laboratory." *Am. J. Phys.* 71.11 (2003).
8. Bartholomew, K. (1992). *Low and High Frequency Elastic Measurement of Quasi-One-Dimensional Conductors.* (Master's Thesis). University of Florida. Pg 13-19.
9. Javernick, P. D., M. Calkins, Y. Calm, E. Knowles, and M. W. Meisel. "Piezoelectric Quartz Tuning Forks as Room Temperature Magnetometers". 2011