PHY2053
Summer 2013
Final Exam Solutions

1. We do deal with vectors. We deal with their components

$$\vec{A}+\vec{B}=\vec{C}$$
$$\vec{B}=\vec{C}-\vec{A}$$

Taking the *x*-components

$$B_x = C_x - A_x = C\cos 90° - A\cos 40° = 0-(50\,\text{m})\cos 40° = -38.3\,\text{m}$$

The *y*-components

$$B_x = C_x - A_x = C\sin 90° - A\sin 40° = (50\,\text{m})\sin 90° - (50\,\text{m})\sin 40° = 17.9\,\text{m}$$

The new resultant is

$$\vec{C}' = \vec{A}+2\vec{B}$$

The *x*-component

$$C'_x = A_x + 2B_x = A\cos 40° + 2B_x = (50\,\text{m})\cos 40° + 2(-38.3\,\text{m}) = -38.3\,\text{m}$$

The *y*-component

$$C'_y = A_y + 2B_y = A\sin 40° + 2B_y = (50\,\text{m})\sin 40° + 2(17.9\,\text{m}) = 67.9\,\text{m}$$

The magnitude is

$$C' = \sqrt{(C'_x)^2 + (C'_y)^2} = \sqrt{(-38.3\,\text{m})^2 + (67.9\,\text{m})^2} = 78.0\,\text{m}$$

2. The distance covered by the first car is

$$\Delta x_1 = v_1\Delta t_1 + \tfrac{1}{2}a_1(\Delta t_1)^2 = (25\,\text{m/s})(60\,\text{s}) + \tfrac{1}{2}(0)(60\,\text{s})^2 = 1500\,\text{m}$$

For the second car,

$$\Delta x_2 = v_2 \Delta t_2 + \tfrac{1}{2} a_2 (\Delta t_2)^2$$
$$= (0)\Delta t_2 + \tfrac{1}{2} a_2 (\Delta t_2)^2$$
$$\Delta t_2 = \sqrt{\frac{2\Delta x_2}{a_2}} = \sqrt{\frac{2(1500\text{m})}{3\text{m/s}^2}} = 32\text{s}$$

3. The free body diagram

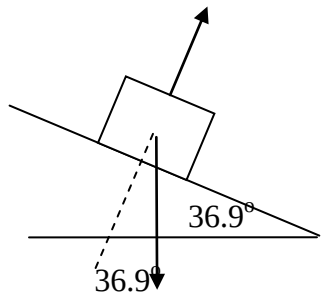

Use Newton's second law along the inclined plane (x-axis)

$$\sum F_x = ma_x$$
$$mg \sin 36.9° = ma$$
$$a = g \sin 36.9° = 5.9\,\text{m/s}^2$$

This answer is **None of these**.

4. Use the free body diagram and Newton's second law.

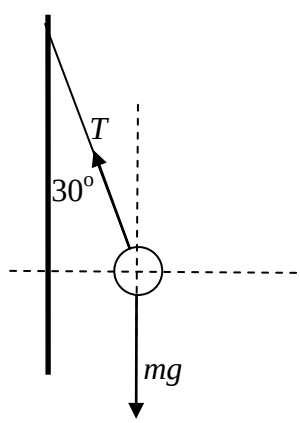

For the radial component,

$$\sum F_r = ma_r$$
$$T\sin 30° = m\omega^2 r$$

The radius from the pole is $r = L\sin 30°$. Substituting,

$$T\sin 30° = m\omega^2 L\sin 30°$$
$$T = m\omega^2 L$$

For the tangential component,

$$\sum F_t = ma_t$$
$$T\cos 30° - mg = 0$$
$$T\cos 30° = mg$$

Substituting for T from the radial equation,

$$T\cos 30° = mg$$
$$(m\omega^2 L)\cos 30° = mg$$
$$\omega = \sqrt{\frac{g}{L\cos 30°}} = \sqrt{\frac{9.8\,\text{m/s}^2}{(3\,\text{m})\cos 30°}} = 1.9\,\text{rad/s}$$

5. The free body diagram for the rock is

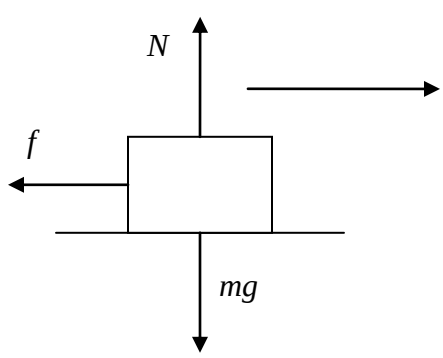

Using Newton's second law for the y-component,

$$\sum F_y = ma_y$$
$$N - mg = 0$$
$$N = mg$$

The frictional force is

$$f = \mu N = \mu mg = (0.26)(0.5\,\text{kg})(9.8\,\text{m/s}^2) = 1.27\,\text{N}$$

Use the work-energy theorem.

$$\Delta K + \Delta U = W_{nc}$$

Since the parking lot is level $\Delta U = 0$. riction does the nonconservative work. Recall $W = F\,\Delta x \cos\theta = f\,\Delta x \cos 180^\circ = -f\,\Delta x$

$$(K_f - K_i) + 0 = -f\Delta x$$
$$0 - \tfrac{1}{2} m v_i^{\,2} = -f\Delta x$$
$$v_i = \sqrt{\frac{2\,f\Delta x}{m}} = \sqrt{\frac{2(1.27\,\text{N})(16\,\text{m})}{(0.5\,\text{kg})}} = 9.0\,\text{m/s}$$

6. Linear momentum is conserved in a collision.

$$p_{ix} = p_{fx}$$
$$m_1 v_{1i} + m_2 v_{2i} = m_1 v_{1f} + m_1 v_{2f}$$

After the collision the cars stick together. This means, $v_{1f} = v_{2f} = v_f$.

$$m_1 v_{1i} + m_2 v_{2i} = m_1 v_f + m_1 v_f$$
$$m_1 v_{1i} + m_2 v_{2i} = (m_1 + m_2) v_f$$
$$v_f = \frac{m_1 v_{1i} + m_2 v_{2i}}{m_1 + m_2} = \frac{(1500\text{kg})(6\,\text{m/s}) + (1000\text{kg})(5\,\text{m/s})}{1500\text{kg} + 1000\text{kg}} = 5.6\,\text{m/s}$$

7. The ladder is equilibrium. Take torques about the foot of the ladder.

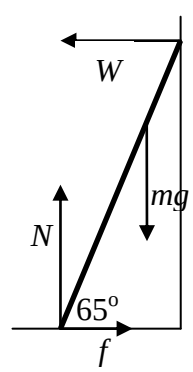

$$\sum \tau = 0$$

$$-mg\tfrac{2}{3}L\cos 65° + WL\sin 65° = 0$$

$$W = \frac{2mg\cos 65°}{3\sin 65°} = \frac{2(25\,\text{kg})(9.8\,\text{m/s}^2)\cos 65°}{3\sin 65°} = 76\,\text{N}$$

8. There are two systems to work with: the mass hanging from the rope and the rope exerting a torque on the cylinder. The free body diagram for the hanging mass is

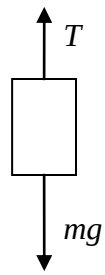

Use Newton's second law

$$\sum F_y = ma_y$$
$$T - mg = m(-a)$$
$$T = m(g - a)$$

The mass accelerates downward so, $a_y = -a$. For the cylinder, use Newton's second law for rotation,

$$\sum \tau = I\alpha$$

The torque is due to the tension in the rope wrapped around the cylinder

$$\tau = Tr_\perp = (mg - ma)R$$

The moment of inertia for a cylinder is

$$I = \tfrac{1}{2}MR^2 = \tfrac{1}{2}(30\,\text{kg})(0.20\,\text{m})^2 = 0.60\,\text{kg}\cdot\text{m}^2$$

Newton's second law for rotation becomes

$$\sum \tau = I\alpha$$
$$(mg - ma)R = I\alpha$$

The mass accelerates as it falls, causing the cylinder to spin faster. The relationship between the acceleration and the angular acceleration is

$$a = \alpha R$$

Substituting into the rotational Newton's second law equation,

$$\begin{aligned}
(mg - ma)R &= I\alpha \\
(mg - m\alpha R)R &= I\alpha \\
mgR - m\alpha R^2 &= I\alpha \\
mgR &= (I + mR^2)\alpha \\
\alpha &= \frac{mgR}{I + mR^2} = \frac{(2\,\text{kg})(9.8\,\text{m/s}^2)(0.20\,\text{m})}{0.60\,\text{kg}\cdot\text{m}^2 + (2\,\text{kg})(0.20\,\text{m})^2} = 5.76\,\text{rad/s}^2
\end{aligned}$$

The angular velocity is found

$$\begin{aligned}
\omega_f - \omega_i &= \alpha\Delta t \\
\omega_f &= \omega_i + \alpha\Delta t = 0 + (5.76\,\text{rad/s}^2)(10\,\text{s}) = 58\,\text{rad/s}
\end{aligned}$$

9. Since the tube has constant area, the continuity equation implies that the speed of the water is constant throughout the pipe. Using Bernoulli's equation,

$$P_1 + \rho g y_1 + \tfrac{1}{2}\rho v_1^{\,2} = P_2 + \rho g y_2 + \tfrac{1}{2}\rho v_2^{\,2}$$

The kinetic energy terms cancel since $v_1 = v_2$.

$$\begin{aligned}
P_1 + \rho g y_1 &= P_2 + \rho g y_2 \\
P_2 - P_1 &= \rho g y_1 - \rho g y_2 = \rho g(y_1 - y_2) = (1000\,\text{kg/m}^3)(9.8\,\text{m/s}^2)(10\,\text{m}) = 9.8\times10^4\ \text{Pa}
\end{aligned}$$

10. The period of a simple harmonic oscillator is given by

$$T = 2\pi\sqrt{\frac{m}{k}}$$

Forming a ratio,

$$\frac{T_2}{T_1} = \frac{2\pi\sqrt{\dfrac{m_2}{k}}}{2\pi\sqrt{\dfrac{m_1}{k}}} = \sqrt{\frac{m_2}{m_1}}$$

Here T_1 = 5 s and T_2 = 10 s. Substituting

$$\frac{10\text{s}}{5\text{s}} = \sqrt{\frac{m_2}{m_1}}$$

$$4 = \frac{m_2}{m_1}$$

$$m_2 = 4m_1$$

Quadruple the mass.

11. The standard form for a traveling wave is

$$y = A\cos(\omega t - kx)$$

The speed of the wave is $v = \omega/k$. For the choices available

Formula	ω (rad/s)	k (rad/m)	$v = \omega/k$ (m/s)
$y = A\cos((40\text{rad/s})t - (20\text{rad/m})x)$	40	20	2.0
$y = A\cos((30\text{rad/s})t - (20\text{rad/m})x)$	30	20	1.5
$y = A\cos((20\text{rad/s})t - (20\text{rad/m})x)$	20	20	1.0
$y = A\cos((40\text{rad/s})t - (30\text{rad/m})x)$	40	30	1.3
$y = A\cos((20\text{rad/s})t - (30\text{rad/m})x)$	20	30	0.67

The combination that gives the largest speed is

$$y = A\cos((40\text{rad/s})t - (20\text{rad/m})x)$$

12. The frequencies for a tube of length L open at both ends are given by

$$f_n = n\frac{v}{2L}$$

For a one meter long tube, the fundamental frequency is

$$f_1 = 1\frac{v}{2L} = \frac{340\text{m/s}}{2(1\text{m})} = 170\text{Hz}$$

For a string resonating at it fundamental frequency, $\lambda = 2L = 2$m. The speed of the wave in the string is

$$v = f\lambda = (2\text{m})(170\text{Hz}) = 340\text{m/s}$$

The speed of a wave on a string is related to the tension in the string and its linear density,

$$v = \sqrt{\frac{F}{\mu}}$$

Solving for the tension,

$$v^2 = \frac{F}{\mu}$$

$$F = \mu v^2 = (4.5 \times 10^{-4}\ \text{kg/m})(340\,\text{m/s})^2 = 52.0\,\text{N}$$