First find currents in resistors using potentials established by batteries

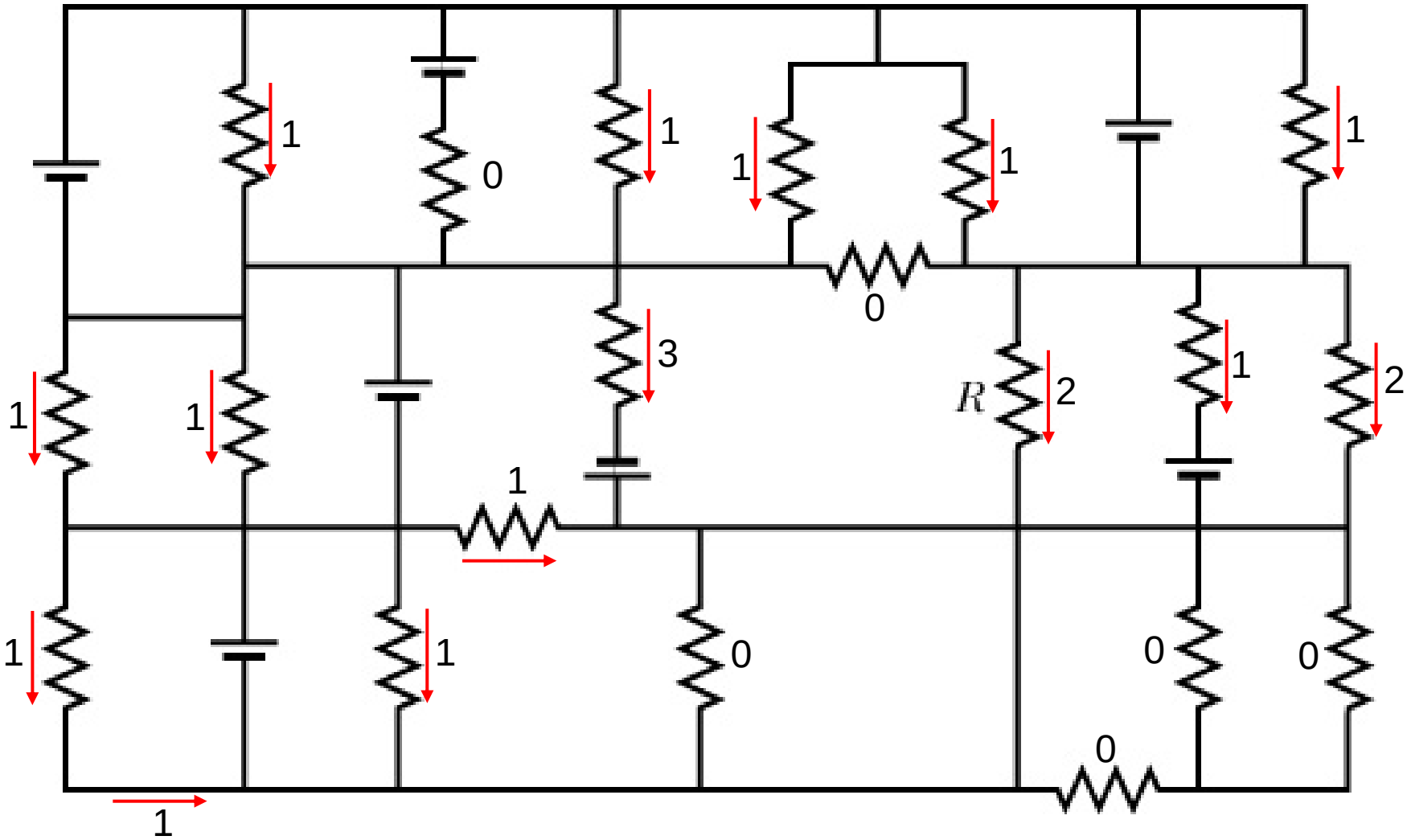

Then use junction rules to find other currents

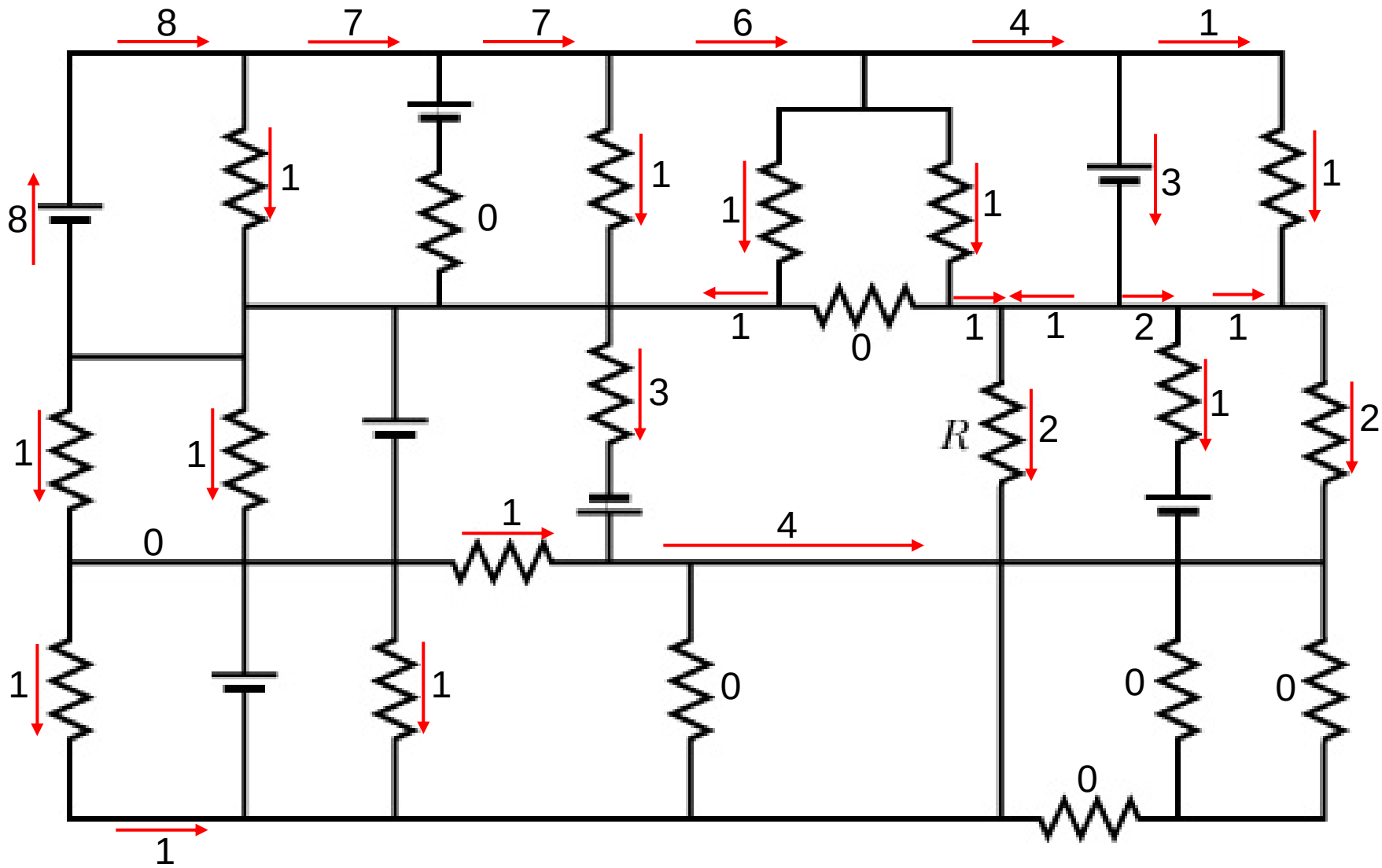
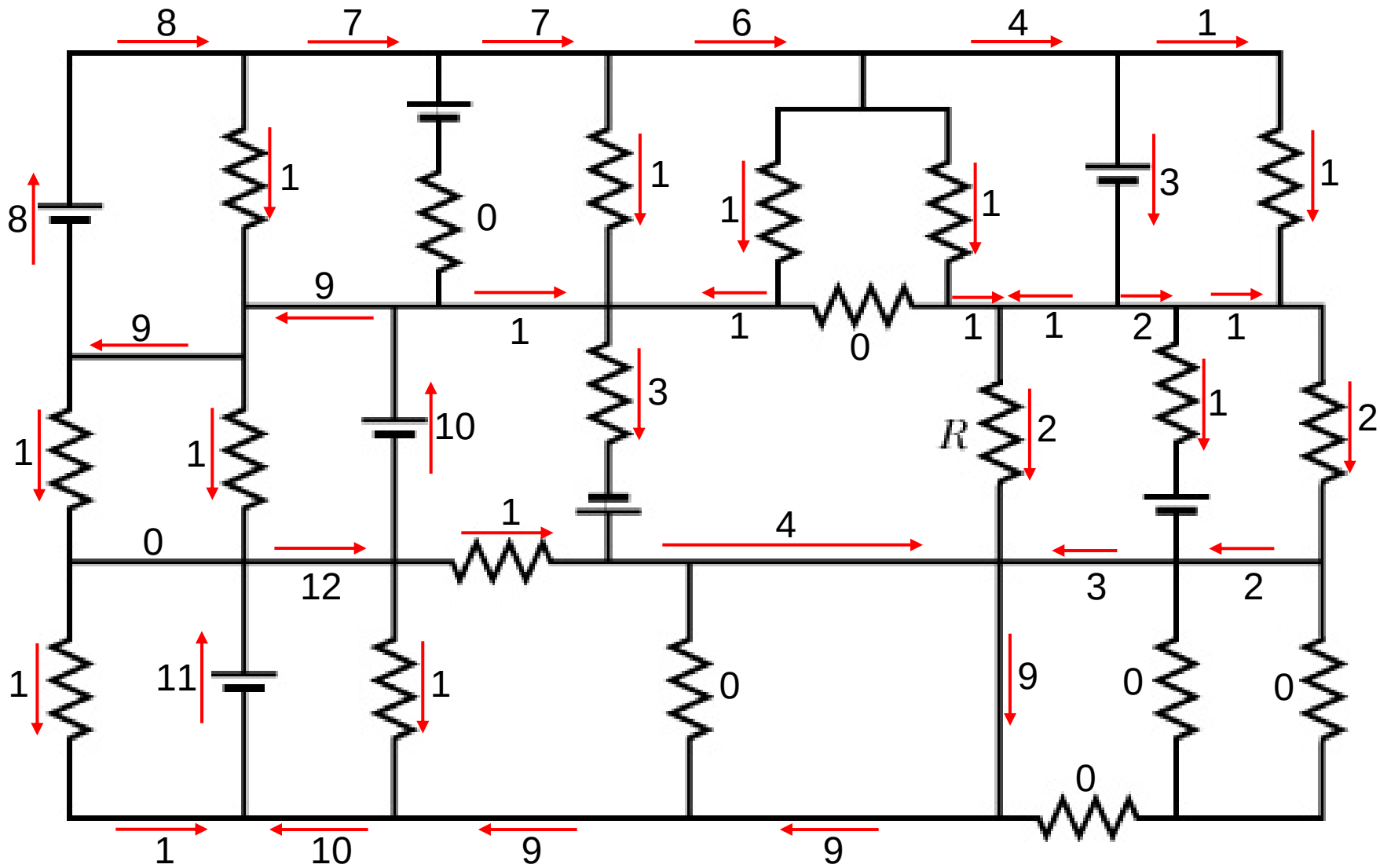
Continue using junction rules until finished