Laboratory for Enabling Technologies

Development of a Micro-Thruster Test Facility which fulfils the LISA requirements

Franz Georg Hey[1,2], A. Keller[1], J. Ulrich[1], C. Braxmaier[3,4], M. Tajmar[2], E. Fitzsimons[1], and D. Weise[1]

[1] Airbus Defence and Space – Space Systems
[2] Technische Universität Dresden, ILR
[3] Universität Bremen, ZARM
[4] DLR Bremen, Institute of Space Systems

22th May 2014

AIRBUS DEFENCE & SPACE

Outline

- Overview Micro Thruster Test Facility
  - Vacuum Chamber
  - Thrust Balance
  - Plasma Diagnostics
- Actual status Micro-HEMP-T development
- Conclusion and Outlook

Micro Newton Thruster Test Facility

- Facility consists of:
  - 1500 litre cubic vacuum chamber
    - → 1200 mm x 1200 mm x 880 mm (without doors)
    - → Two big 1200 mm x 1200 mm doors enabling good handling
  - Pumps:
    - → Forestage pump: 20 litre/s
    - → Two turbo pumps: 1400 litre/s
    - → Cryo pump: 10000 litre/s
  - Only viton sealings used
  - With Cryo Pump
    - → Pressure without gas ballast 4e-7 mbar
    - → Pressure with gas ballast 1e-6 mbar
  - Without Cryo Pump
    - → Pressure without gas ballast 2e-6 mbar
    - → Pressure with gas ballast 1e-5 mbar

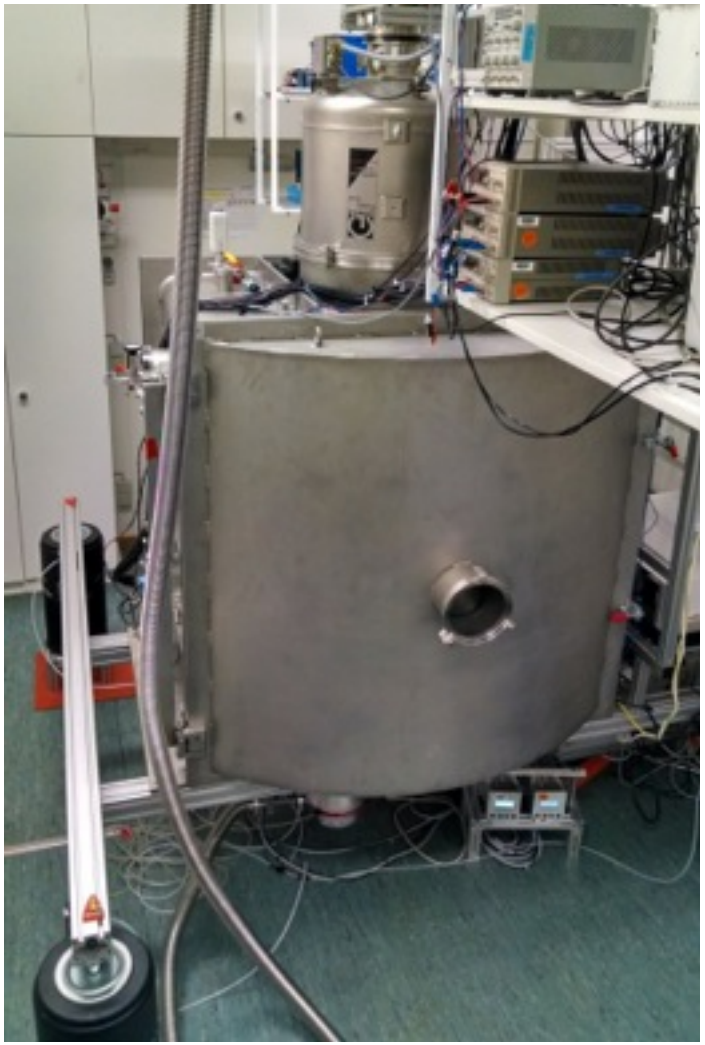

Micro Newton Thruster Test Facility

- Facility consists of:
  - ITEM support structure
    - → Mounted on 4 optical isolators
    - → Enables flexible and fast mounting of the different components
  - Thrust Balance
    - → Double pendulum thrust balance with optical readout
  - Plasma Diagnostics
    - → 15 Faraday Cups
    - → 1 Retarding Potential Analyser

1200 mm

Balance - Used Force Measurement Principle

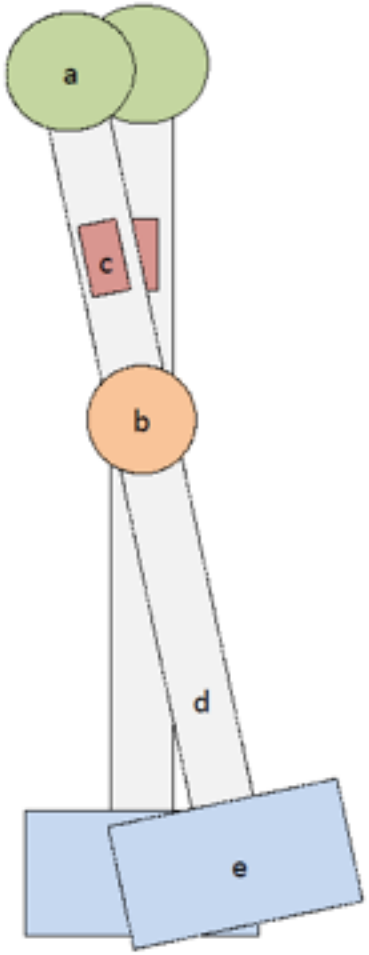

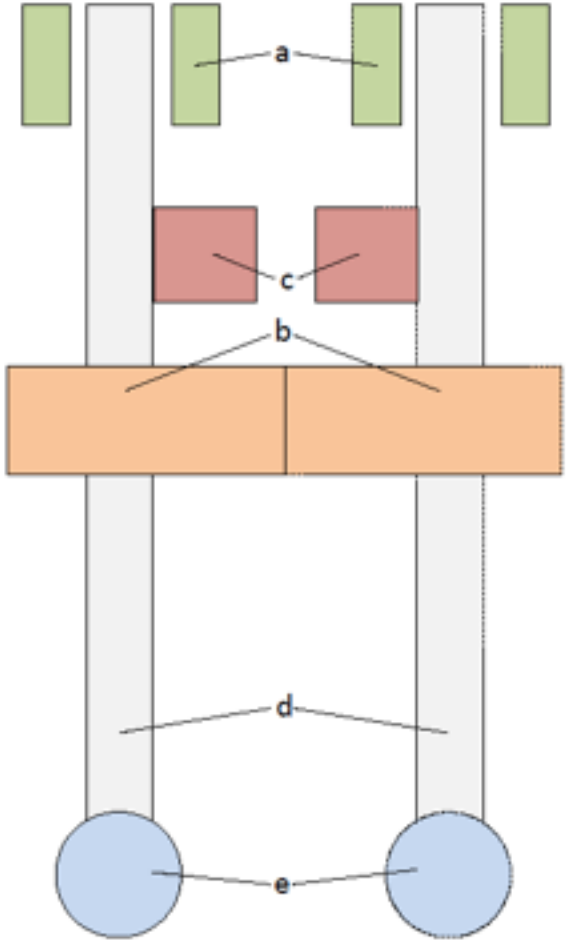

a) Damper

b) Bearing

c) Translation Sensor

d) Pendulum Structure

e) Thruster

Micro Newton Thrust Balance

- Symmetric Double Pendulum Balance
- Optical readout
- Frictionless Bearing (4 leaf springs)
- Tunable spring rate (calibration weights)
- Calibration via an Electro-Static Comb (ESC)
- Power supply via the leaf springs
- Tunable damping via eddy current brake

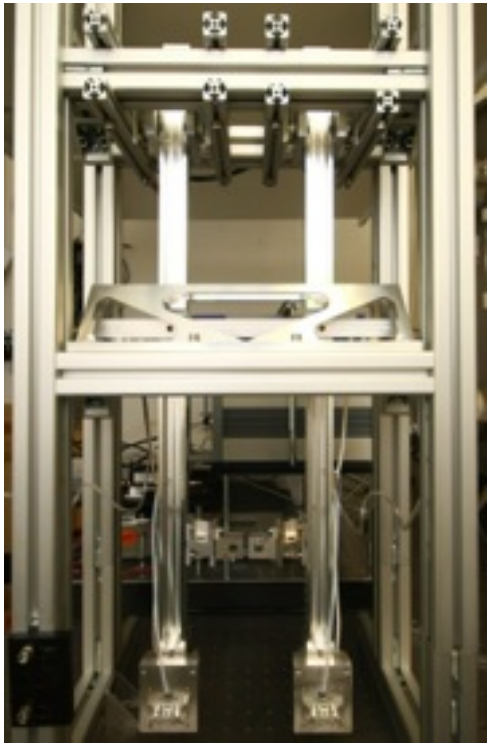

Calibration via ESC

- Thrust calculation:

$$F_{ESC} = 2 \cdot N \cdot \epsilon_0 \cdot V_{ESC}^2 \cdot (1.0245 - \frac{g}{\pi \cdot x_0})$$

- Linear behavior of the balance

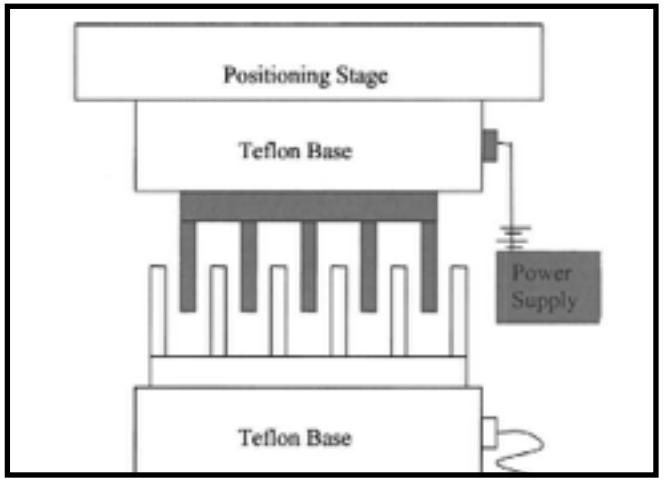

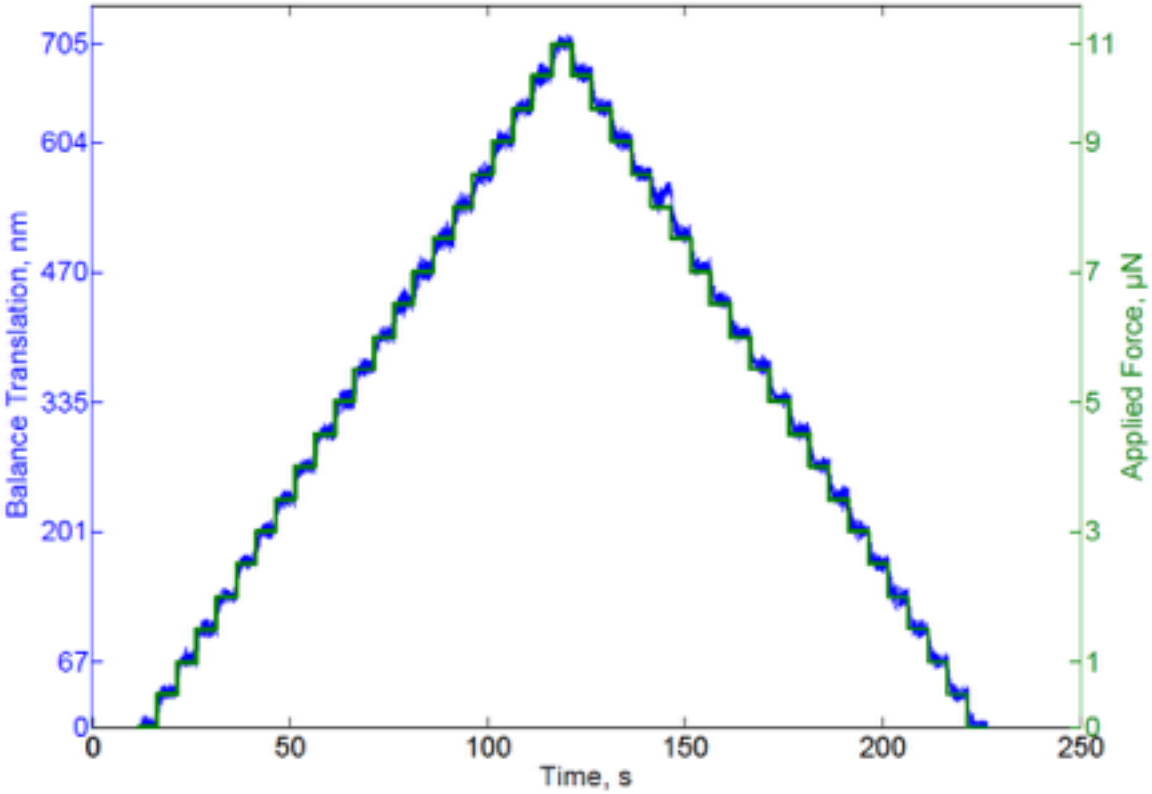

Balance Performance Without Cryo Pump

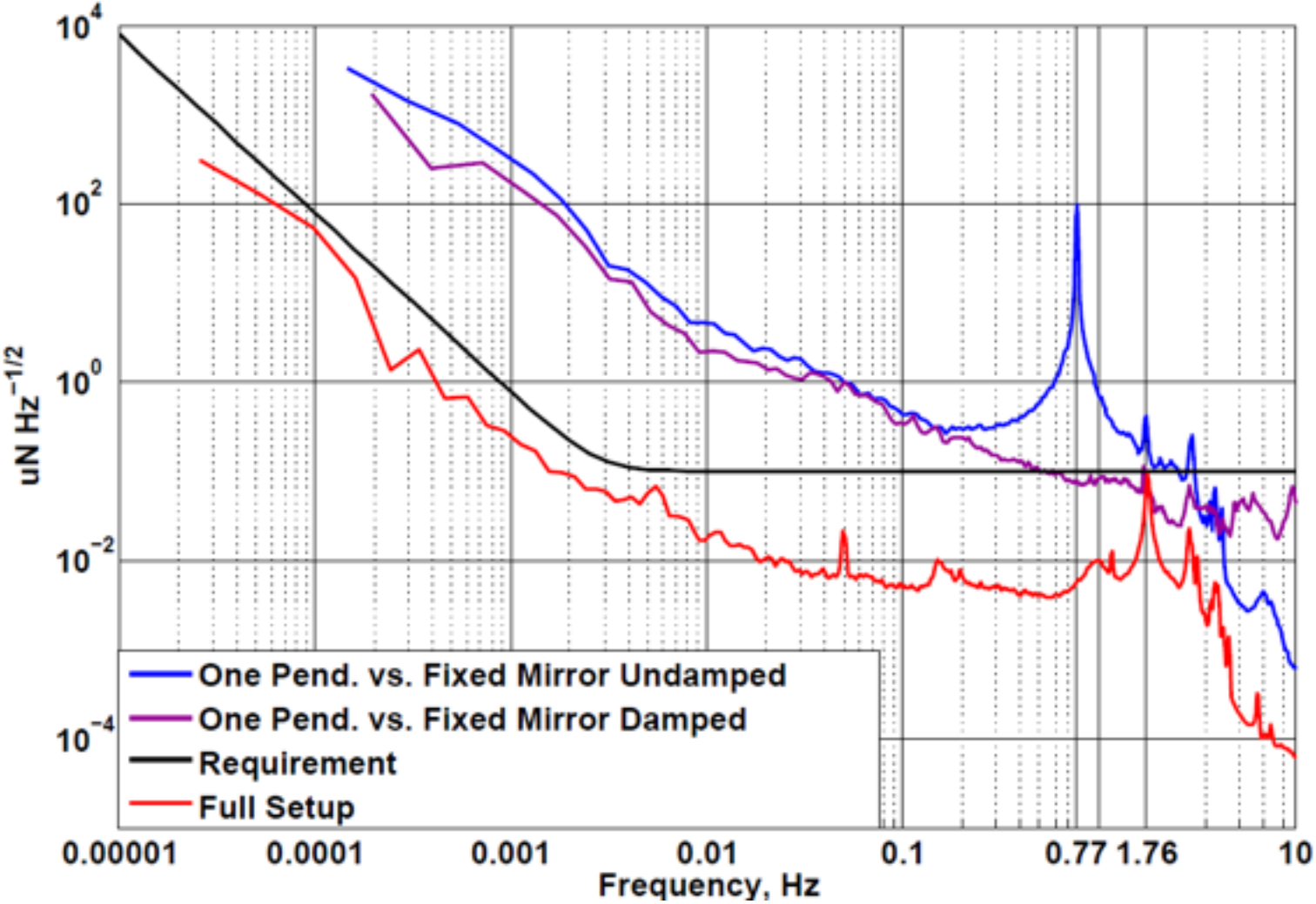

Plasma Diagnostics

- Measurement Setup
  - 15 Faraday Cups
    - Measurement of Ion Current Density
    - Measurement of Ion beam divergence Angel
  - 1 Retarding Potential Analyser
    - Measurement of Ion Energy
  - All devices mounted on Jib-Arm
  - 180° rotatable around the thruster via Stepper Motor
  - Parallel measurements of the thrust balance and the plasma diagnostics are suitable

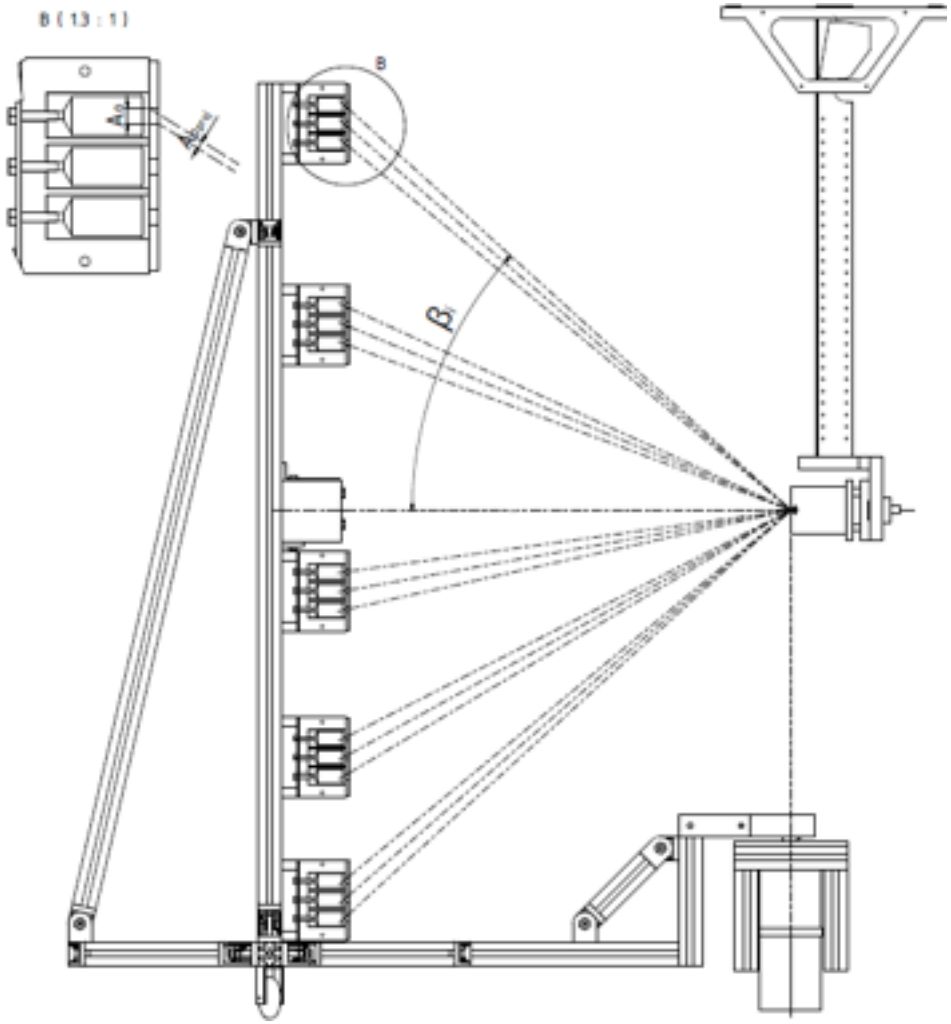

Plasma Diagnostics Measurement Results

- Faraday Measurement of the micro-HEMP-T

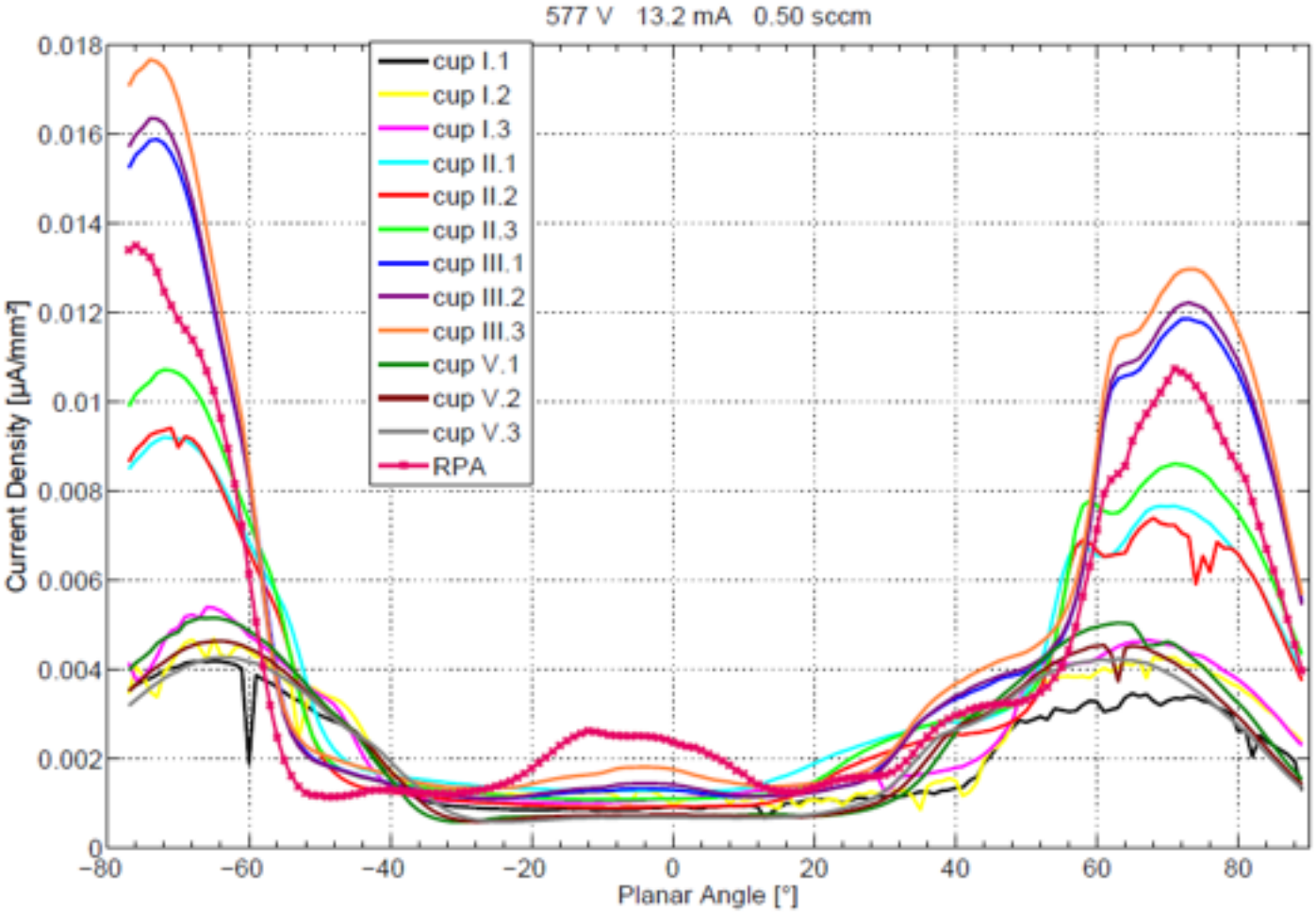

Actual Status Micro-Highly Efficiency Multistage Plasma Thruster (µ-HEMP-T) Development

- µHEMP-T advantages (Simple as cold gas):
  - Only gas supply, one power supply and neutraliser needed
  - No liquid propellant (no vapor pressure problems, no heaters)
  - No radio frequency
  - No electro magnets
  - In worst case scenario can be used as cold gas thruster

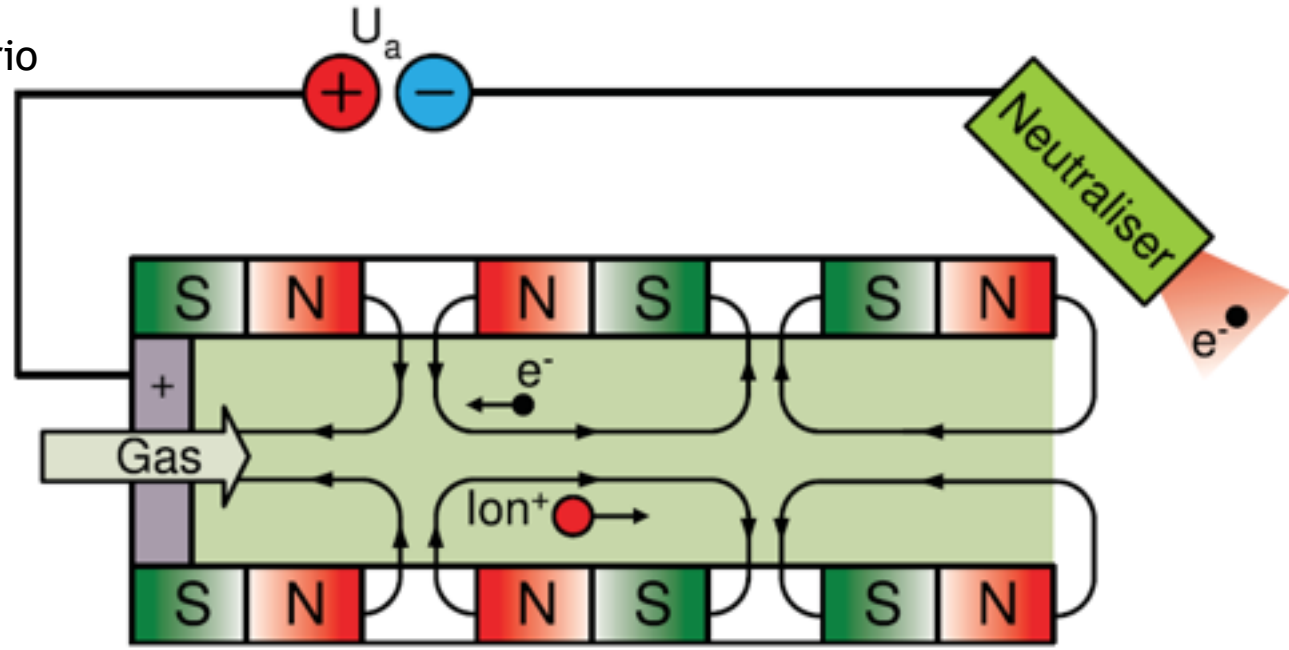

Actual Status Micro-HEMP-T Development

- Result of the performed experimental parameter study
  - Micro HEMP-T are able to operate down 66 µN
  - Low ISPs at low thrust levels (< 200 s)
  - ISPs > 1500 s at 400 µN
  - Parameter study showed no limitations in point of down scaling

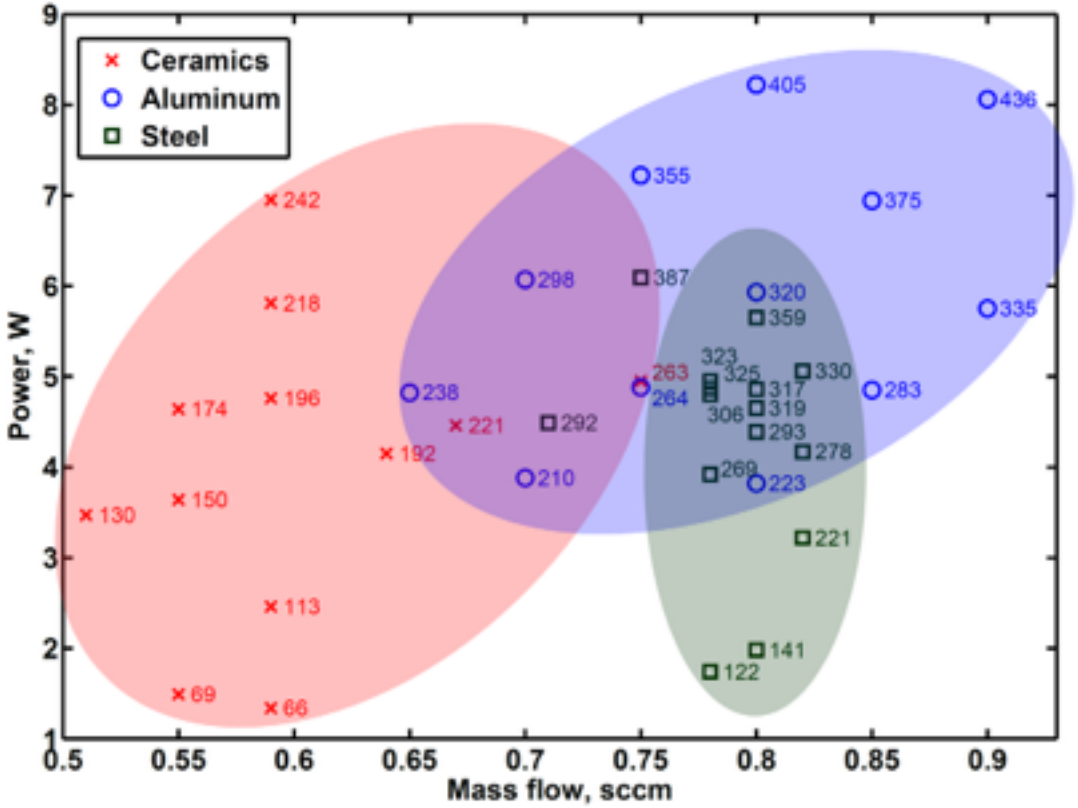

Conclusion and Outlook

- Conclusion
  - Micro Thruster Test Facility in Friedrichshafen is operational
  - Thrust balance fulfils the LISA Requirement in point of thrust noise
  - Simultaneous using of Plasma Diagnostics and Thrust balance leads to an effective thruster characterizing
  - Mirco-HEMP-T is scaled down to the higher micro-Newton range
- Outlook
  - Thrust measurements in closed loop
  - Thrust measurements with permanent running cryo pump (better noise shielding)
  - Characterising of other micro-Newton thruster e.g. µRIT, Cold Gas, In-FEEP and others
  - Further downscaling of the micro-HEMP-T
    - → Supported with a PiC – Simulation
    - → Test of a new Thruster Design

Thank you for your attention

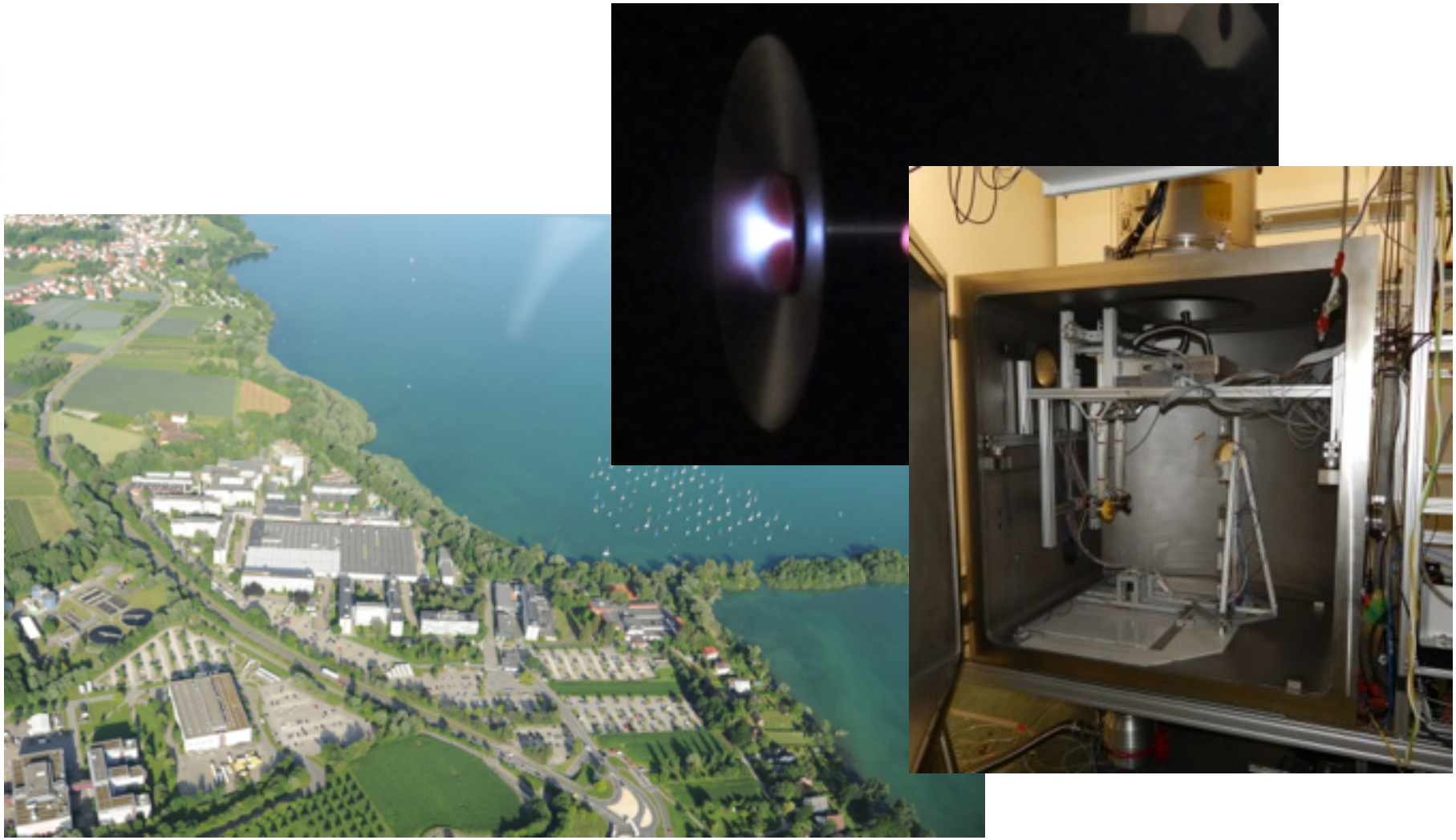

Micro-Newton HEMP-T Neutral Gas Flow Thrust

- Measurement of the neutral gas flow thrust of micro-HEMP-T:
- Massflow steps of 0.025 sccm
- Every step generates 0.42 µN

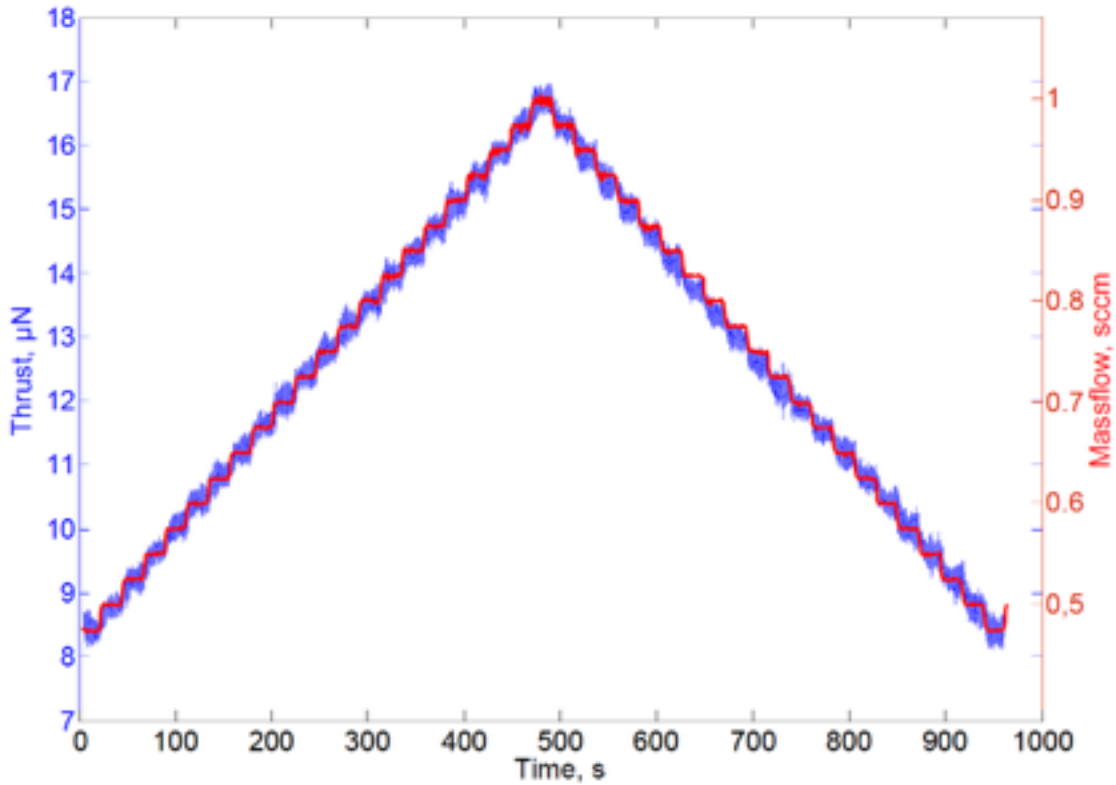

Thrust Balance Performance

- Transfer Function Measurement and PSD Correction (shown PSD with reduced eddy current brake effect)

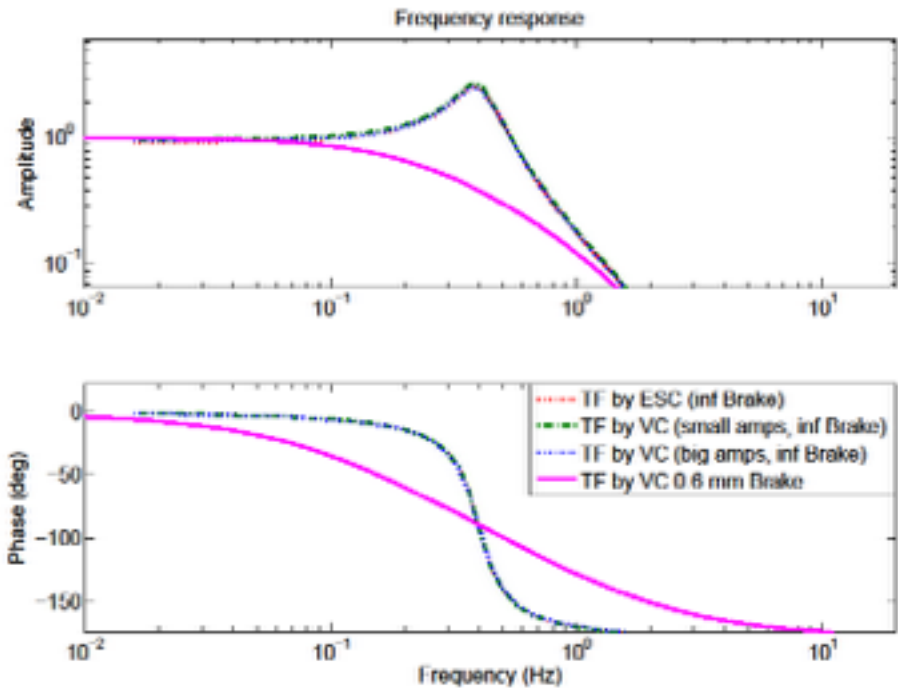

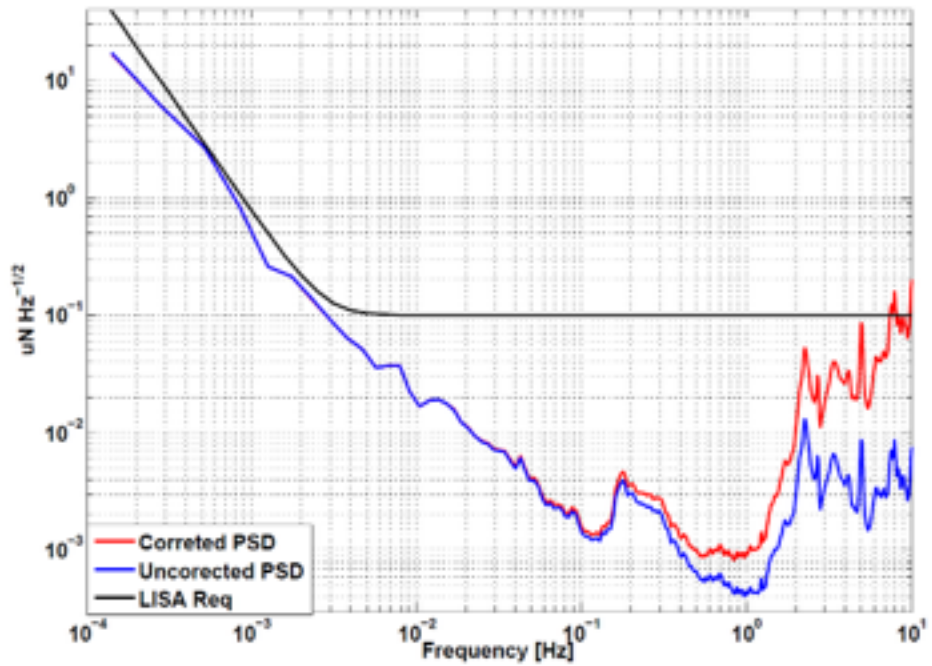

Data Acquisition and Handling

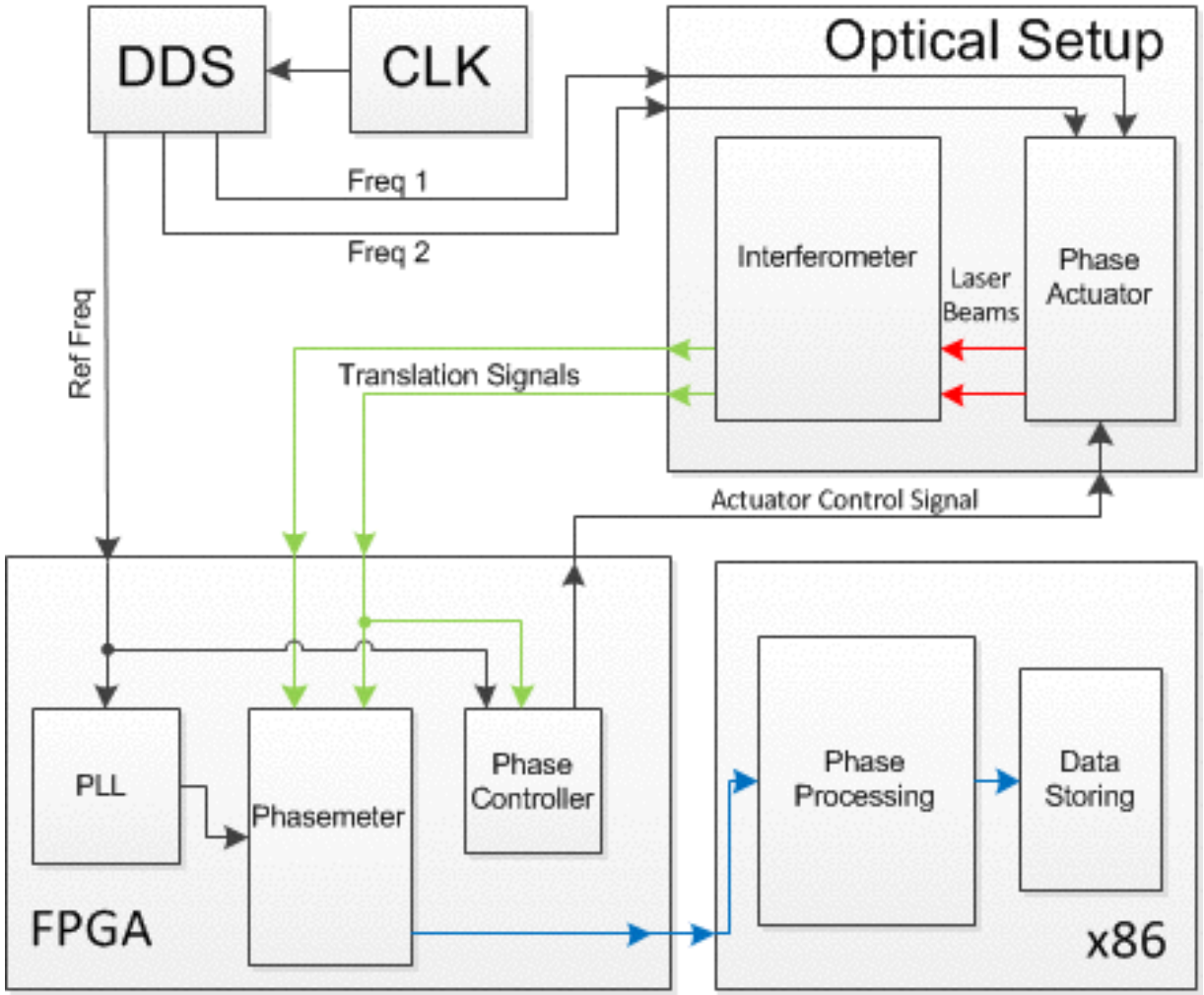

New Test Facility

- New facility consists of:
  - Tank
  - Pumps + controllers
  - ITEM support structure
    - → Mounted on 4 optical isolators
    - → Enables flexible and fast mounting of the different components

Eddy Current Brake

- Implementation of an eddy current brake
  - Two $Nd_2Fe_{14}B$ Magnets are used per pendulum
  - Aluminum plates used as conductor

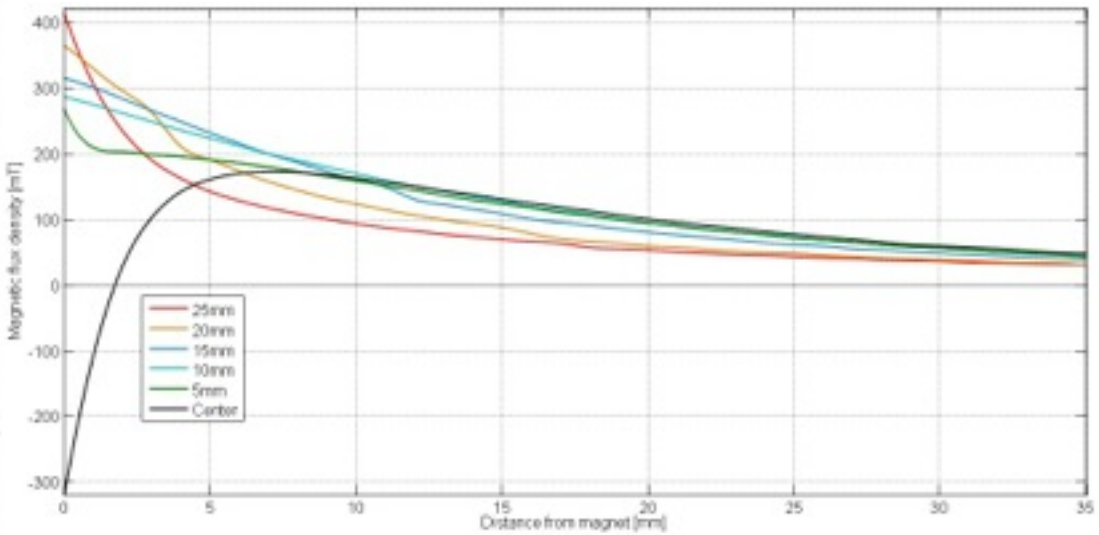

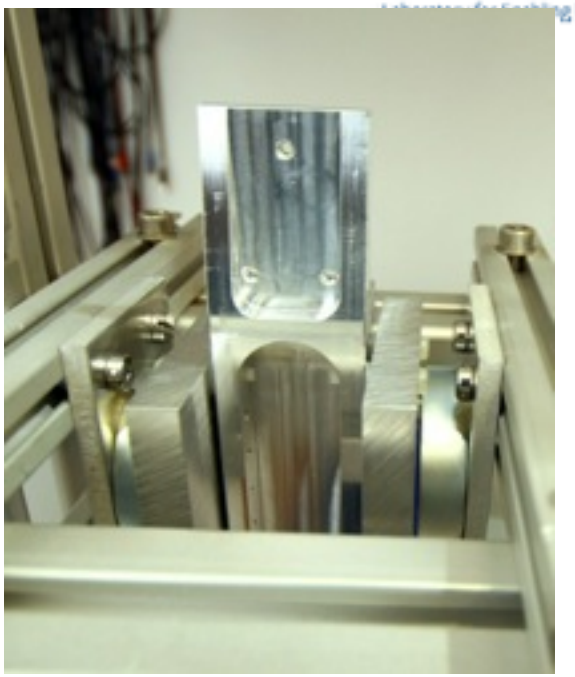

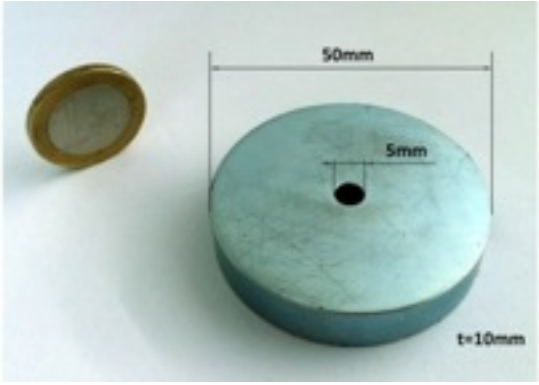

Plasma Diagnostics Measurement Results

- Every Cup and the RPA was calibrated with an highly precise current source
- Linear behavior of the whole electronics and low noise amplification

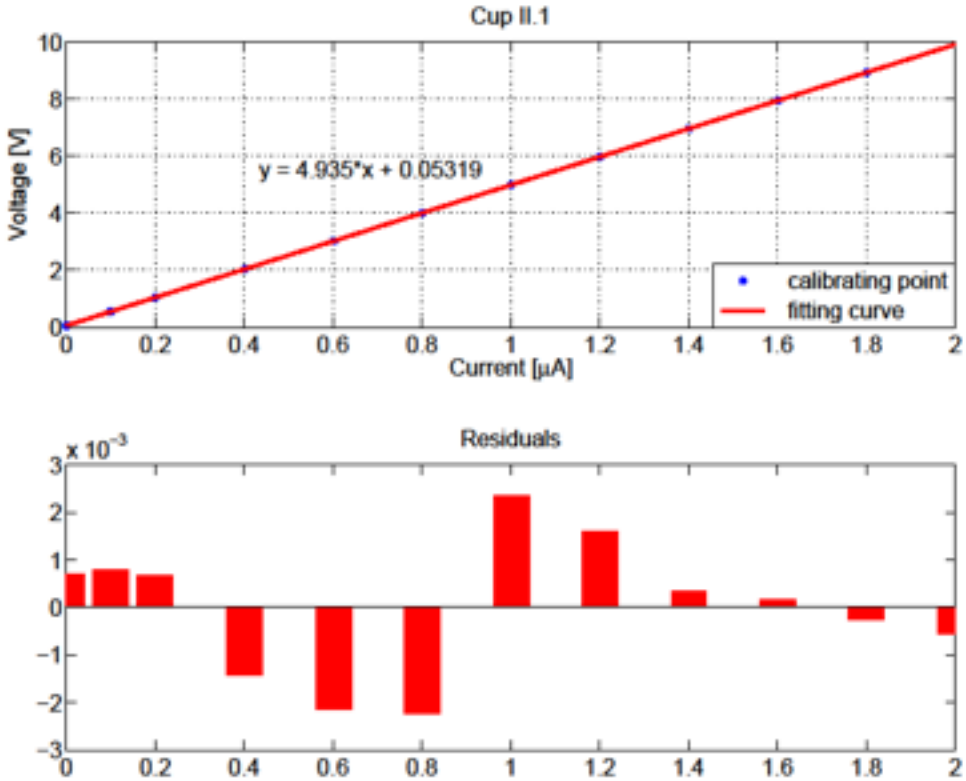

Plasma Diagnostic Electronics

- Schematic of the Data Acquisition

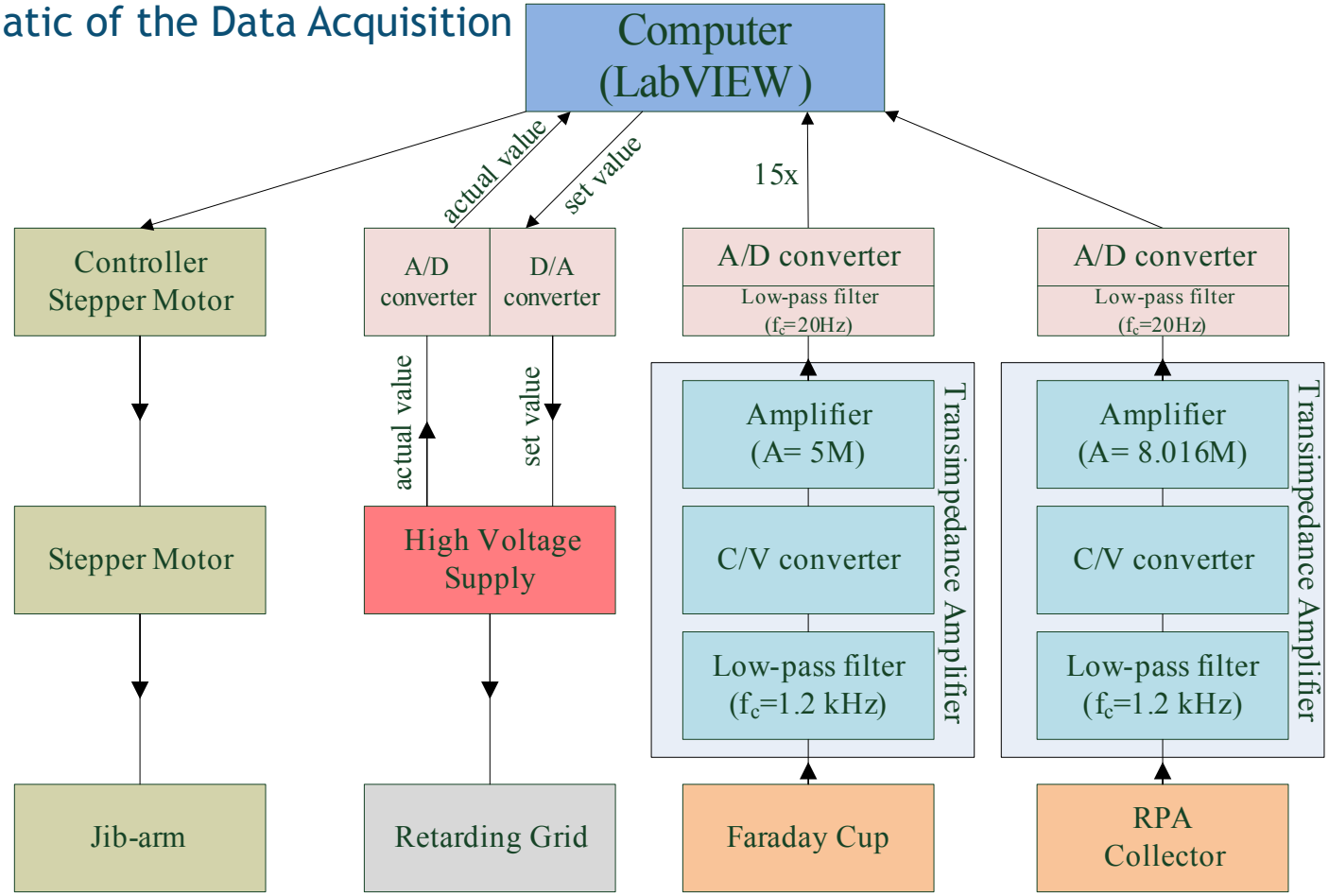

Plasma Diagnostics Measurement Results

- Retarding Potential Measurement

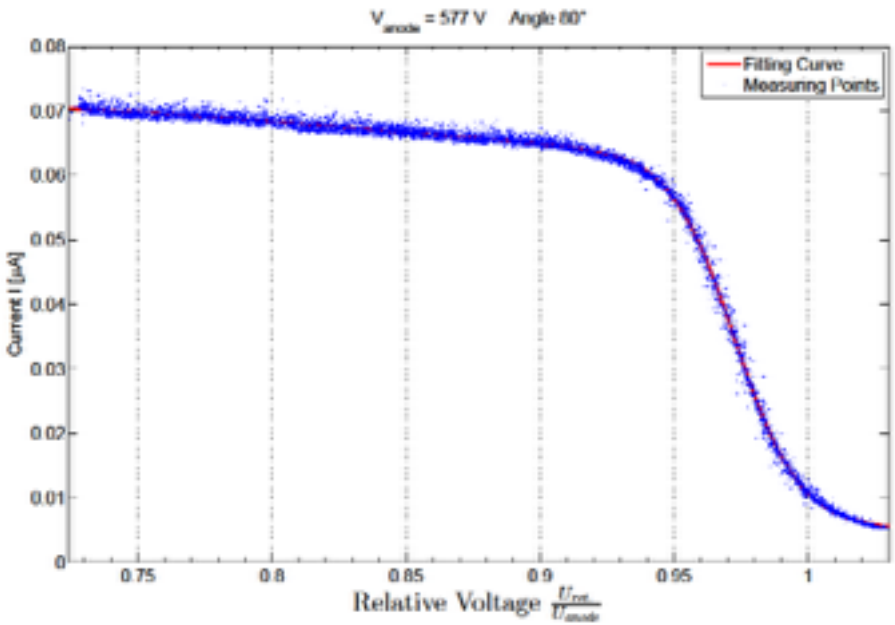

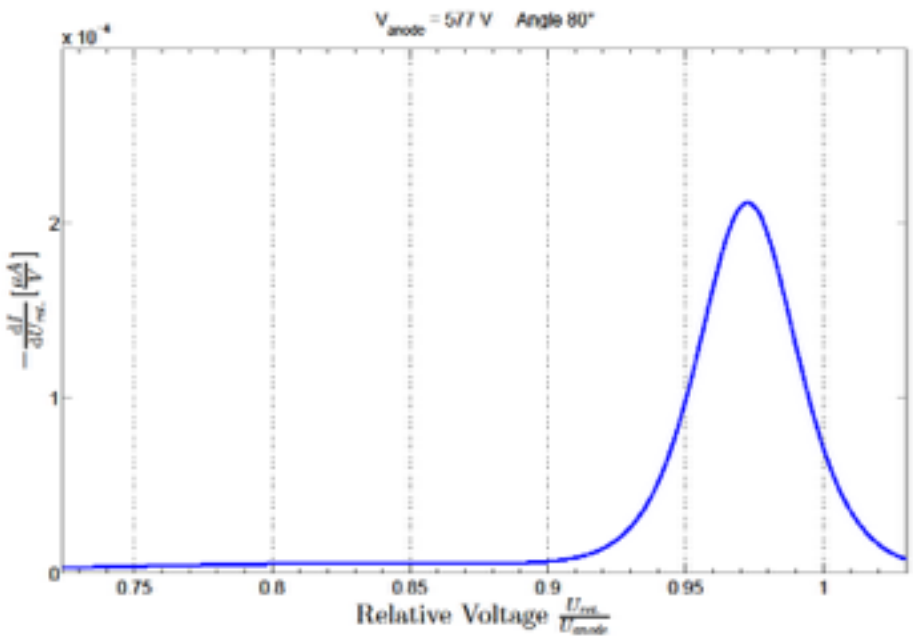

Data Acquisition and Handling

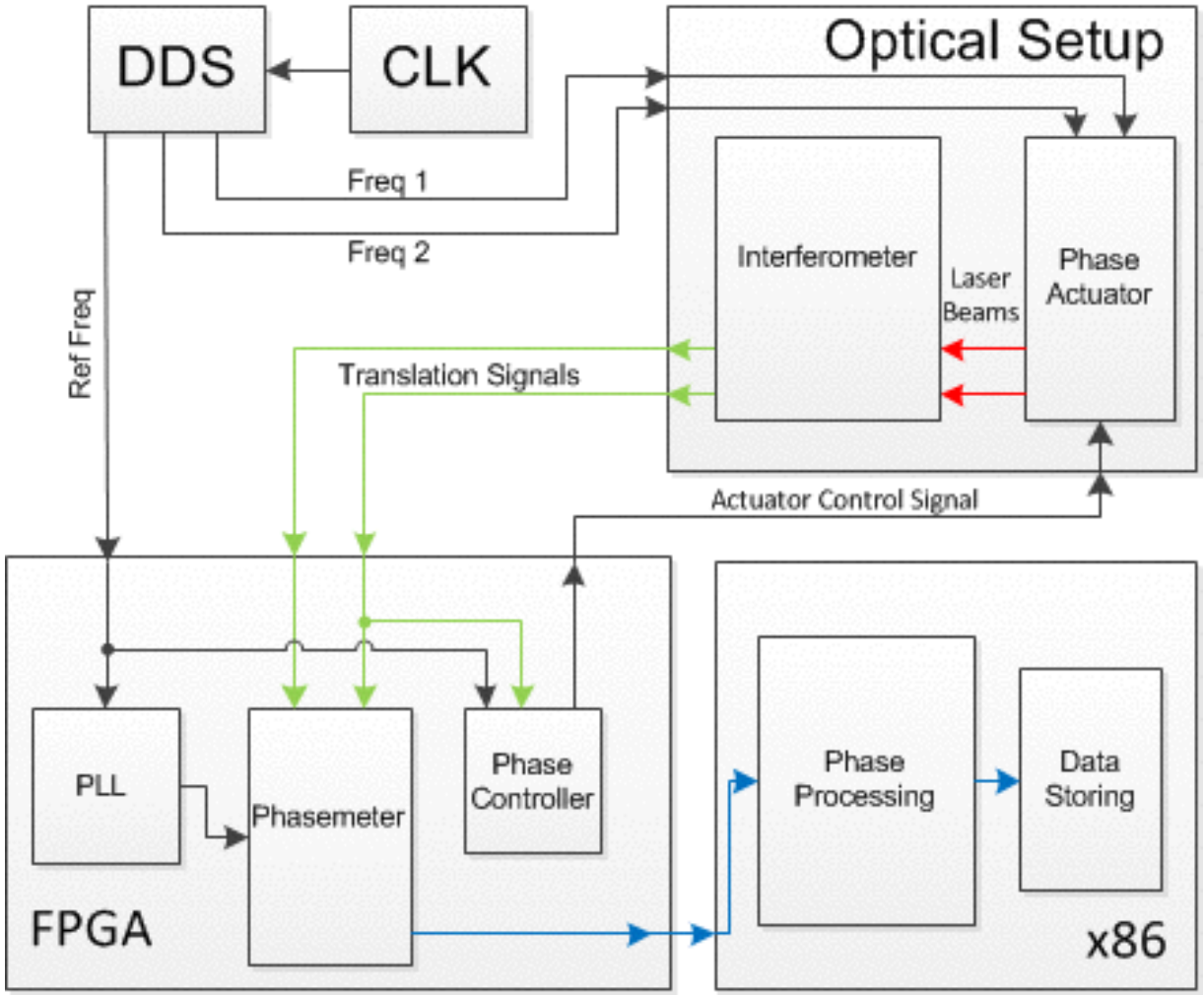

Micro-Newton HEMP-T Thrust Measurement

- Measurement of the micro-Newton HEMP-T
- Red presents the calculated thrust
- Blue presents the measured thrust
- Constant factor of 1.3 between calculated and measured thrust

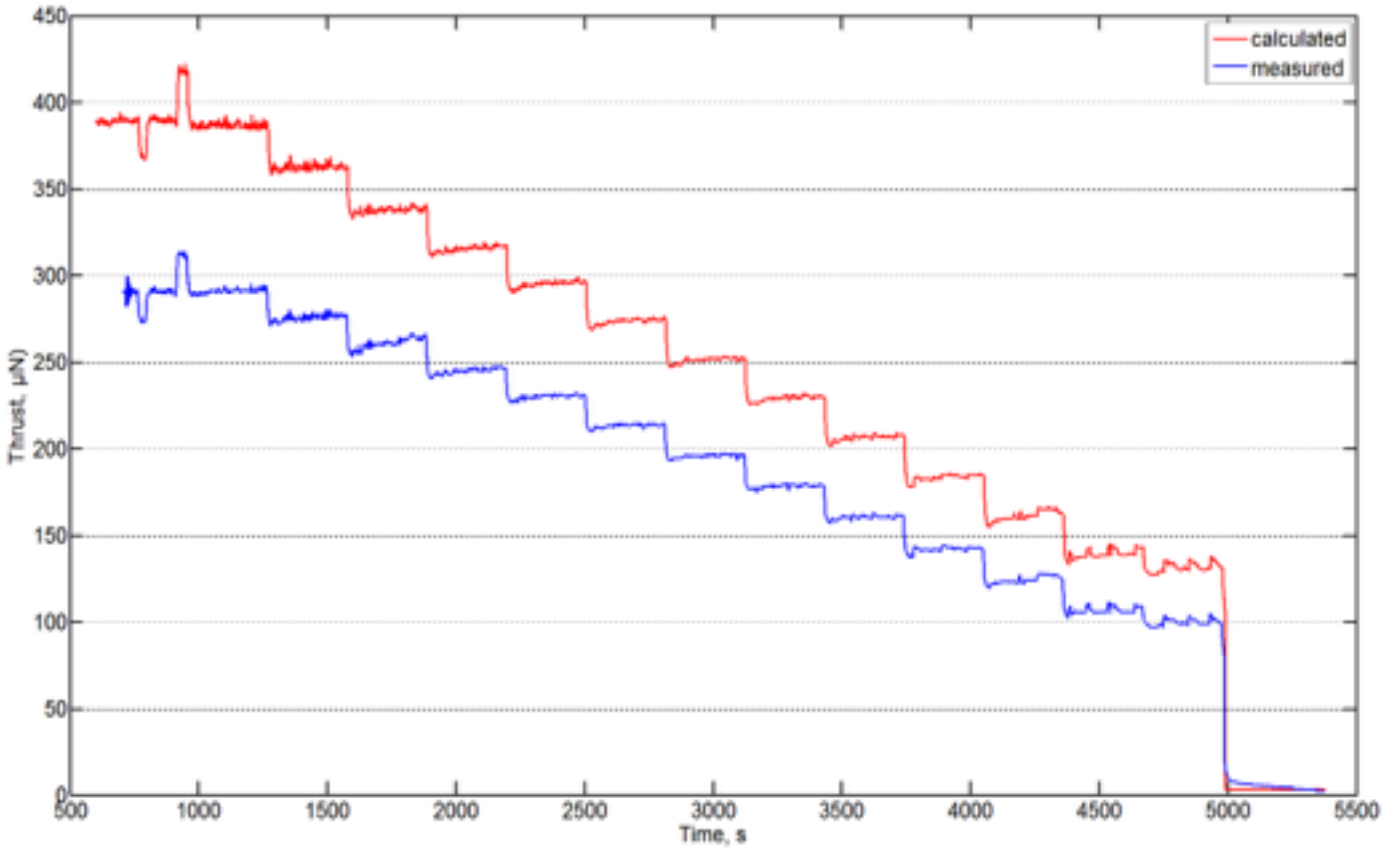

Retarding Potential Analyser

- Measurement of the incoming Ions at the Collector
- Secondary electrons are deflected by the suppressor Grid
- The Retarding Voltage are supplied via the Retarding grid
- Repelling Grid shields the setup from incoming electrons

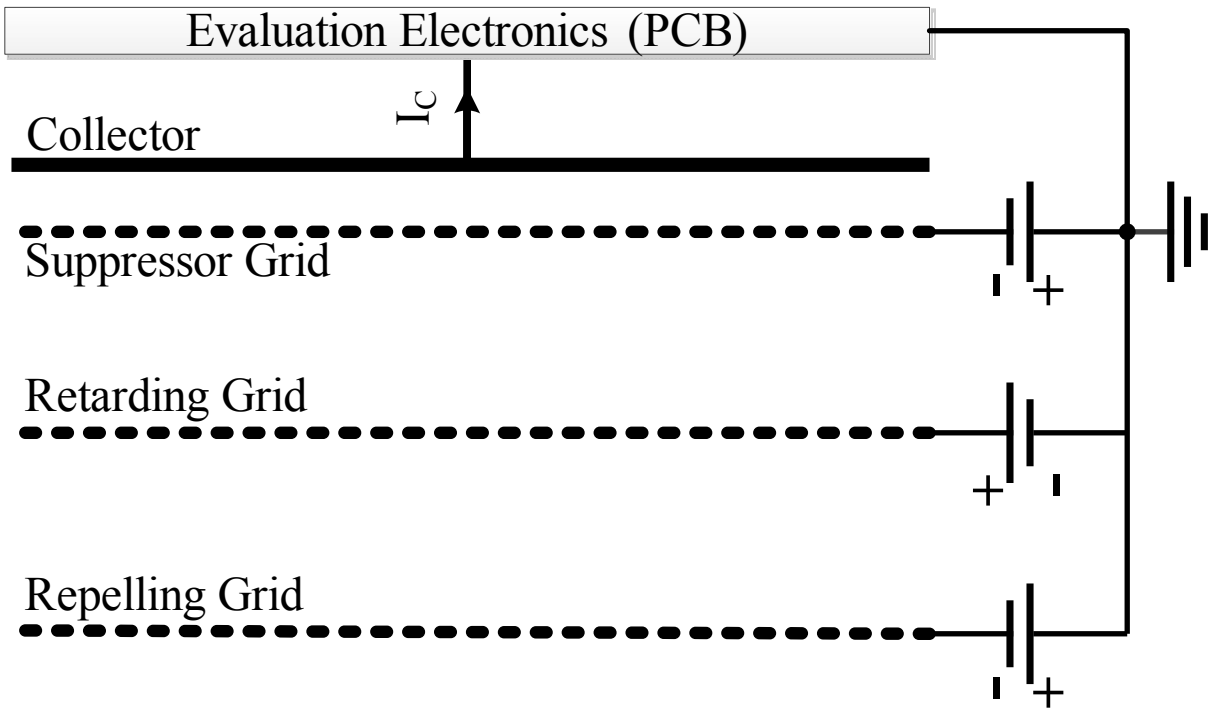

Retarding Potential Analyser Design

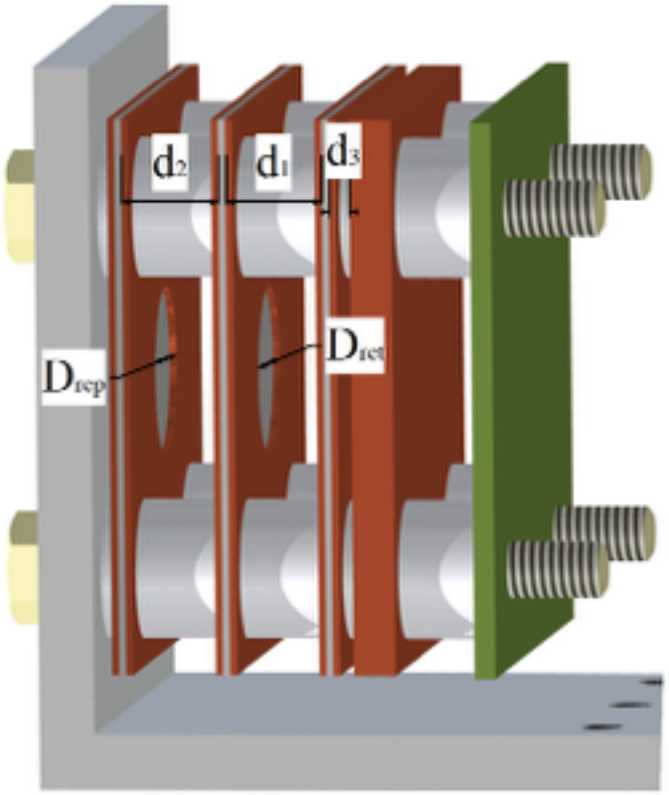

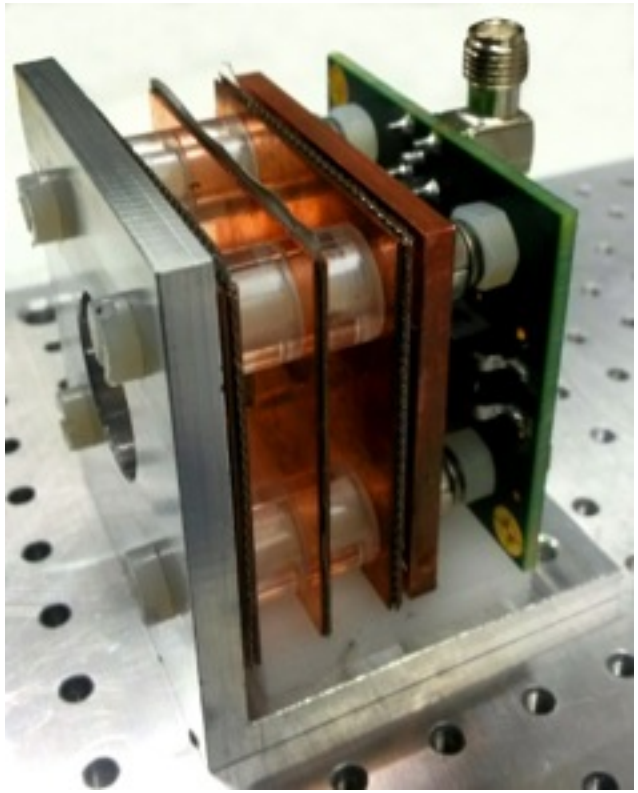

Faraday Probe

- Faraday Probe Principle:

$$j_c = \frac{I_{ion}}{A_o}$$

1. Fast Xe Ion from Thruster
2. Slow Ions
3. Deflected Electrons
4. Secondary Electrons
5. Secondary Electrons