Albert Einstein Institute
Max Planck Institute for Gravitational Physics and
Leibniz Universität Hannover

High-precision phasemeter for Deep Phase Modulation Interferometry

Thomas Schwarze, Oliver Gerberding, Felipe Guzmán Cervantes, Gerhard Heinzel, Karsten Danzmann

Leibniz Universität Hannover
Germany

Centre for Quantum Engineering
and Space-Time Research

Max Planck Society
Germany

We gratefully acknowledge support by the European Space Agency (ESA) (22331/09/NL/HB,16238/10/NL/HB) and the German Aerospace Center (DLR) (50OQ0601, 50OQ1301) and thank the German Research Foundation for funding the Cluster of Excellence QUEST (Centre for Quantum Engineering and Space-Time Research).

Contents

- Introduction
- Deep phase modulation interferometry
  - Principle
  - Phasemeter
- Measurements
  - Electrical measurements
  - Optical measurements
- Conclusions

Introduction

Introduction

- Laser interferometry: method for precise measurements of length changes
- Example: Mach-Zehnder setup

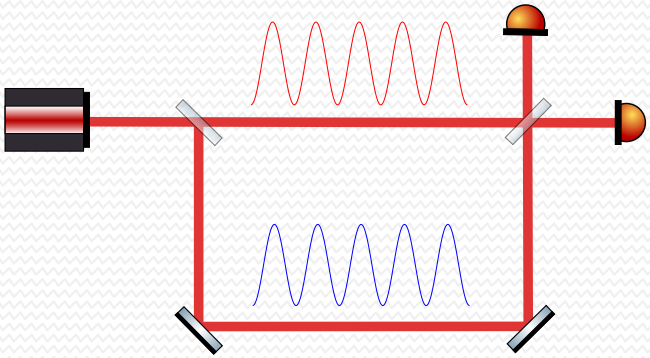

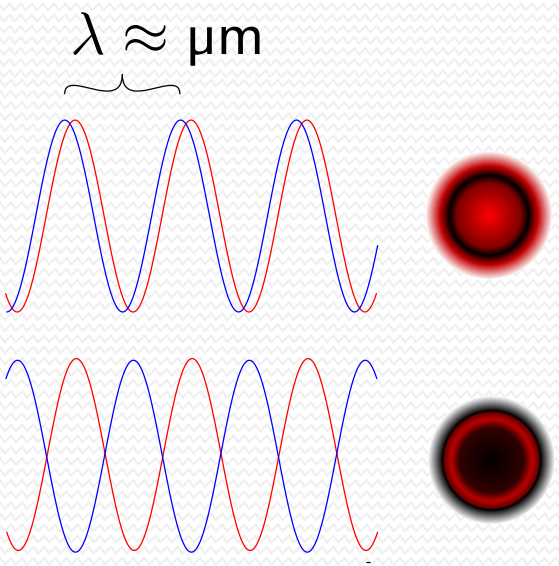

- Length/phase change causes constructive or destructive interference in range of $\lambda \approx \mu m$

Interferometry techniques

- Homodyne interferometry

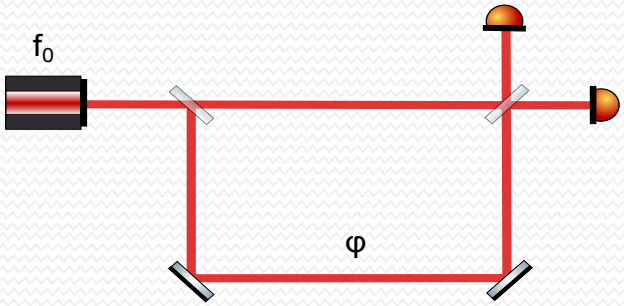

Low dynamic range: fraction of wavelength ($\approx$ µm)

- Heterodyne interferometry

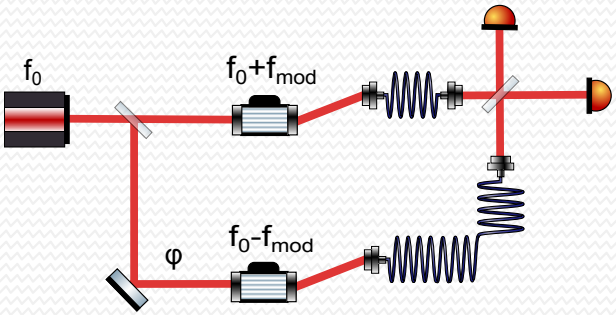

Higher dynamic range
Complex modulation part

Interferometry techniques

- Phase modulated homodyne interferometry

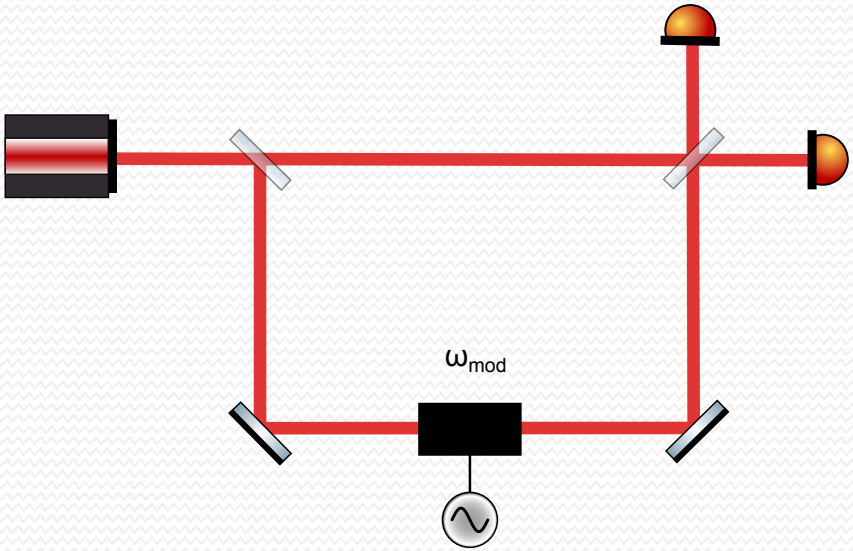

- For $m > \pi$: *deep* phase modulation

Interferometry techniques

- Phase modulated homodyne interferometry

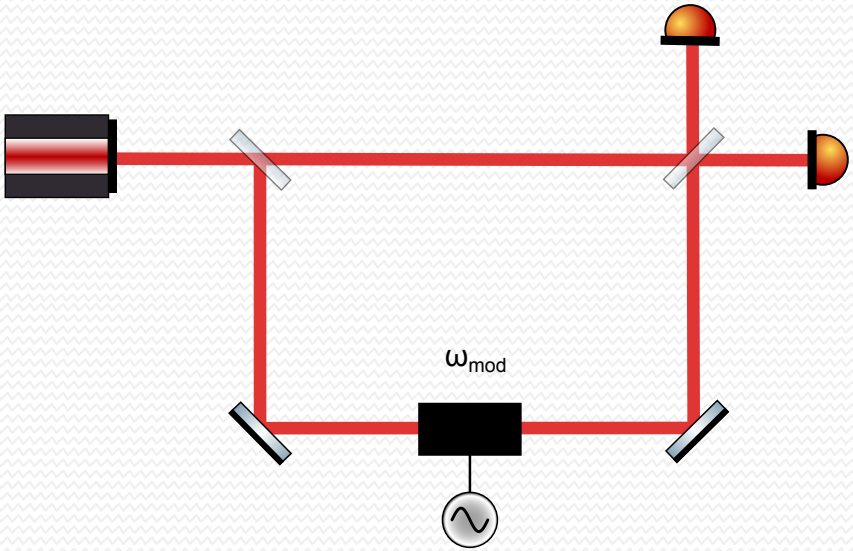

- For $m > \pi$: *deep* phase modulation

→ High dynamic range with compact optical setup
(Complexity in readout electronics, the phasemeter)

Applications

- Surface profiling
- Characterization of piezo actuators

...

Applications

- Surface profiling
- Characterization of piezo actuators

  ...
- Tracking of (free-floating) test masses (TMs), up to 6 degrees of freedom

Applications

- Surface profiling
- Characterization of piezo actuators

  ...
- Tracking of (free-floating) test masses (TMs), up to 6 degrees of freedom

  - Geodesy (ground- and space-based)

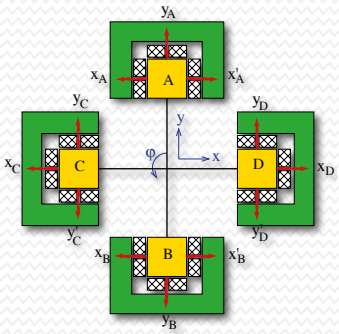

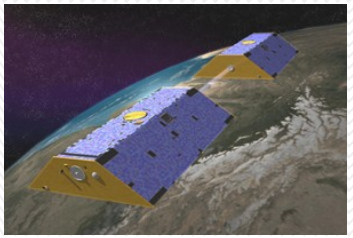

Geodesy with geo-Q!

- Sonderforschungsbereich funded by the DFG

- Using multiple TM, multiple DoF tracking for precise geodesy and climate research

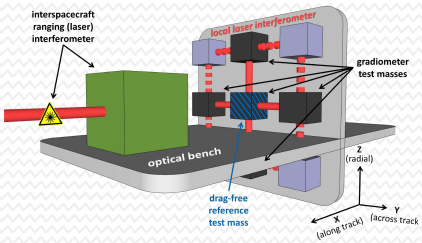

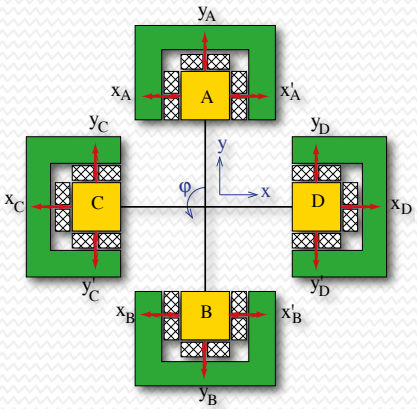

Applications

- Surface profiling
- Characterization of piezo actuators

  ...
- Tracking of (free-floating) test masses (TMs), up to 6 degrees of freedom

  - Geodesy (ground- and space-based)

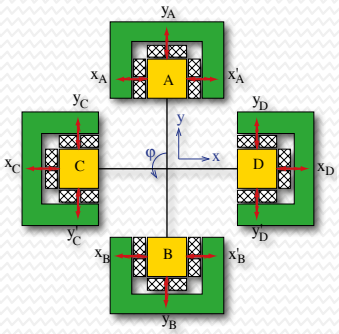

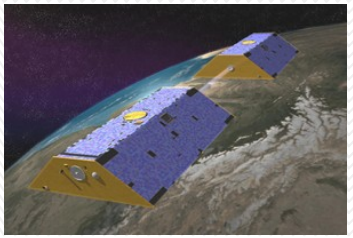

Applications

- Surface profiling
- Characterization of piezo actuators

  ...
- Tracking of (free-floating) test masses (TMs), up to 6 degrees of freedom

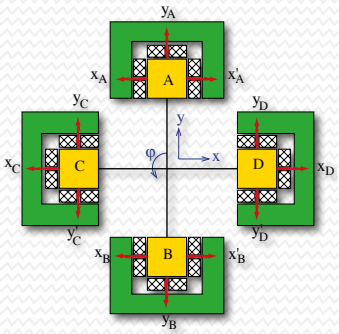

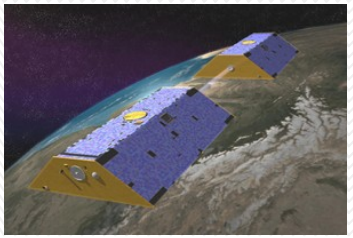

  - Geodesy (ground- and space-based)

  - eLISA

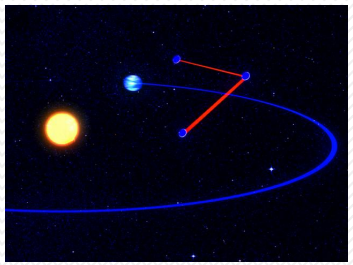

eLISA

- Michelson-like interferometer through 4 free-floating TMs in satellites

- Drag-free control requires test mass tracking in all DoF

→ DPMI as alternative technique

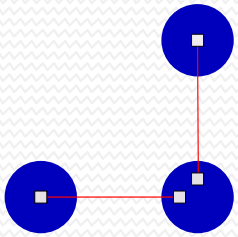

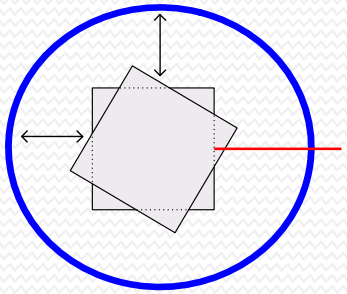

Deep phase modulation interferometry

Principle

- Sinusoidal phase modulation leads to time-dependent interferogram

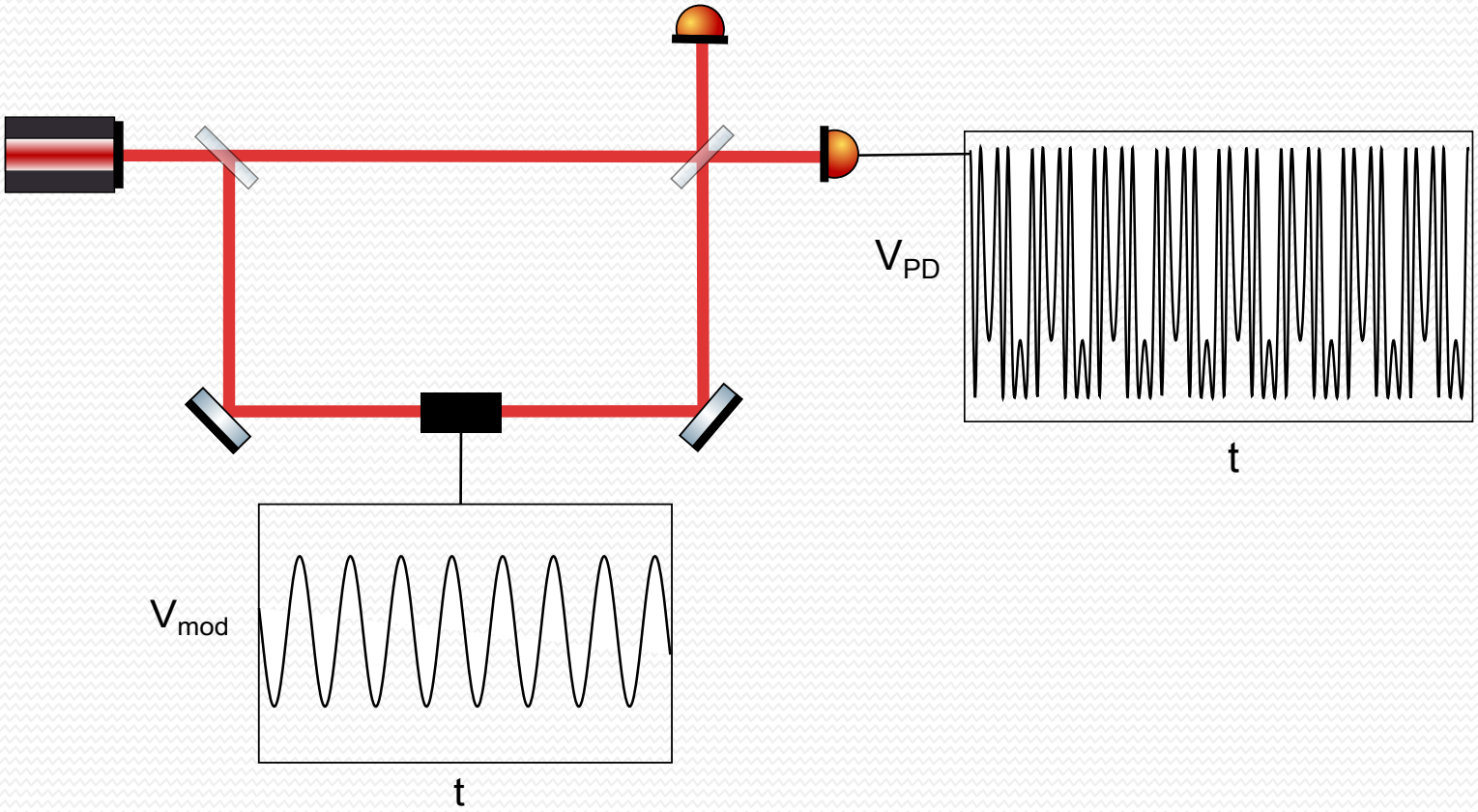

TAB

Principle

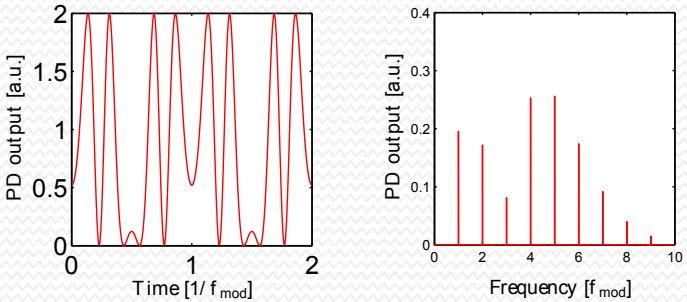

- Relation for Fourier components (bins) and φ , other parameters:

$$c_n = k\, J_n(m)\, (-1)^n \cos(\varphi + n/2)\, \mathrm{e}^{\mathrm{i}n\psi}$$

- Over-dimensioned system of equations: solved numerically

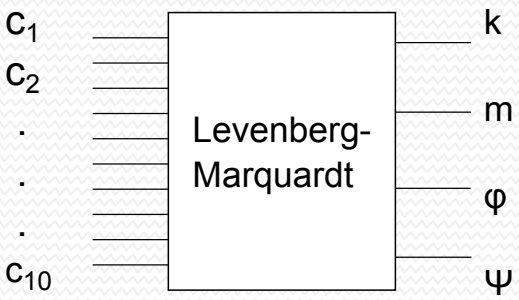

Initial implementation of phase readout

- First implementation: G.Heinzel et al. , Optical Express 08/2010
  - 20 kHz data acquisition card
  - Fourier transform + fit on PC

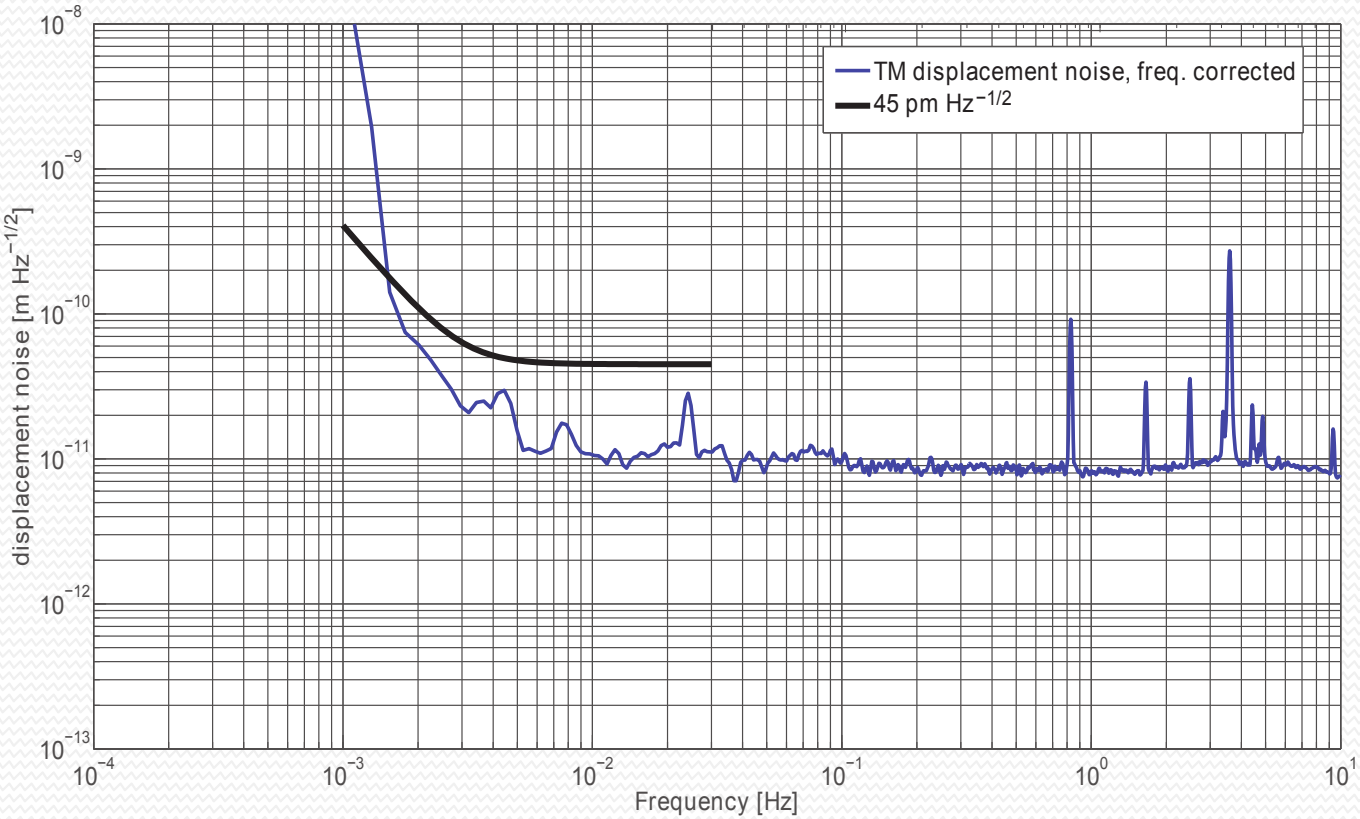

New phasemeter

- New digital FPGA-based implementation of the phasemeter

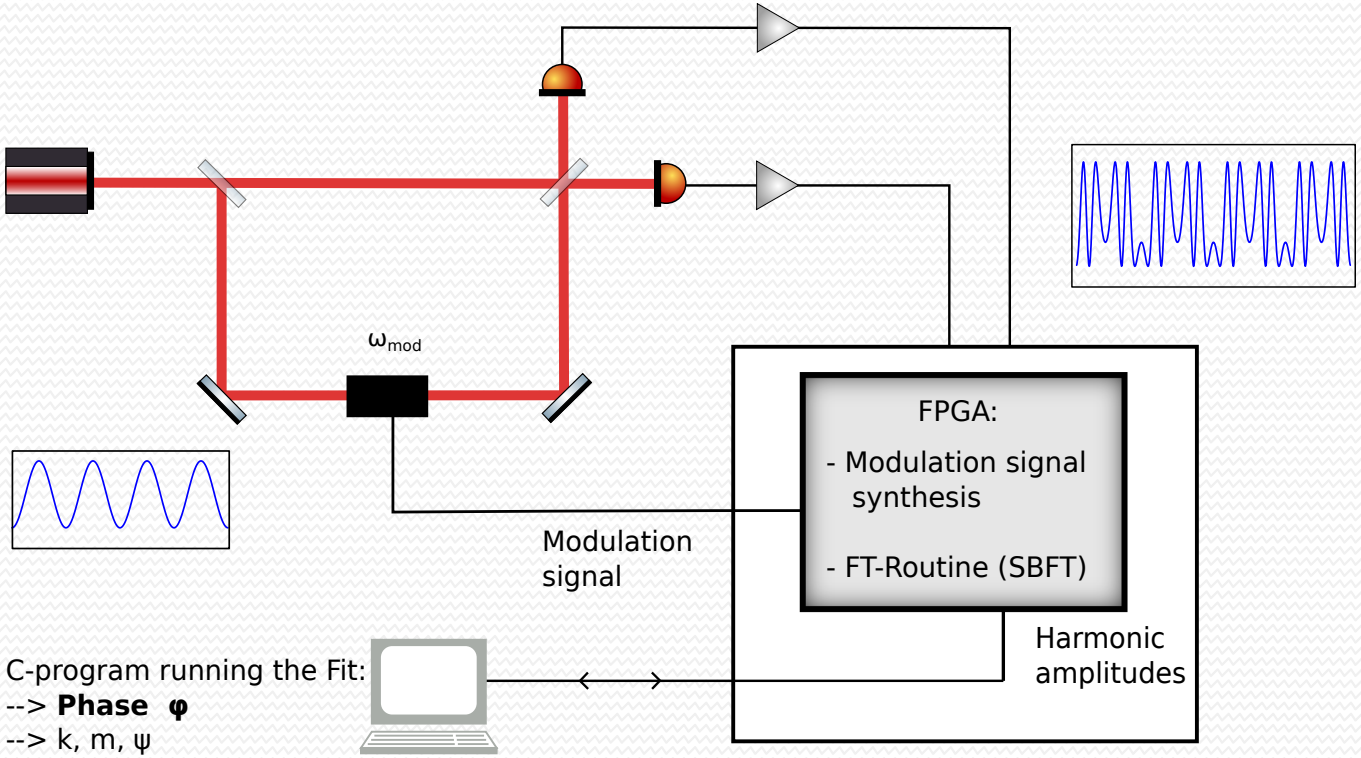

New phasemeter - Advantages

Main advantage

- FPGA allows for higher sampling rate of ADC and data processing:
  - → 40 MHz instead of 20 kHz
  - → Higher sampling rate: less white noise due to ADC quantization:

$$\mathrm{ASD}_{\mathrm{noise}} \propto \frac{1}{\sqrt{f_{\mathrm{samp}}}}$$

FPGA architecture

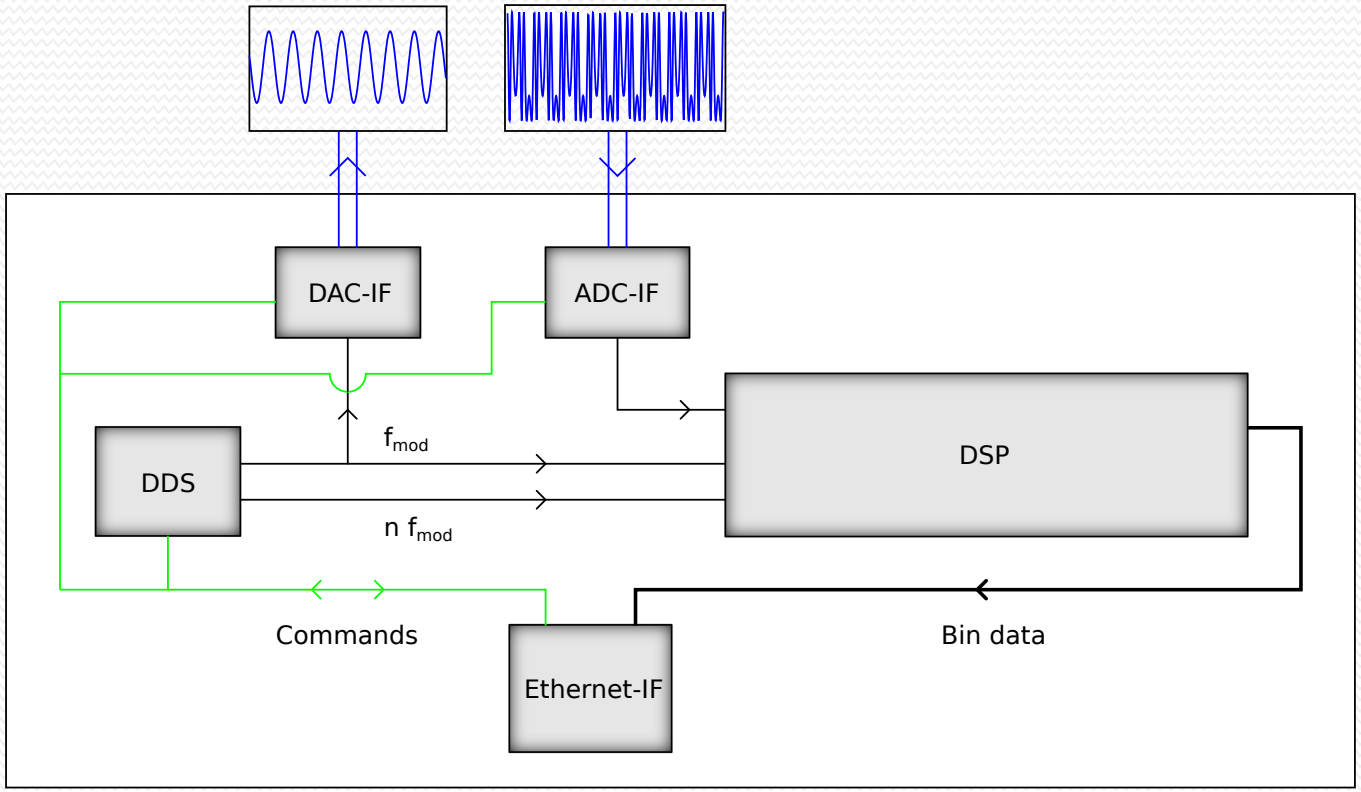

FPGA architecture

- Direct digital synthesis: generating modulation signal

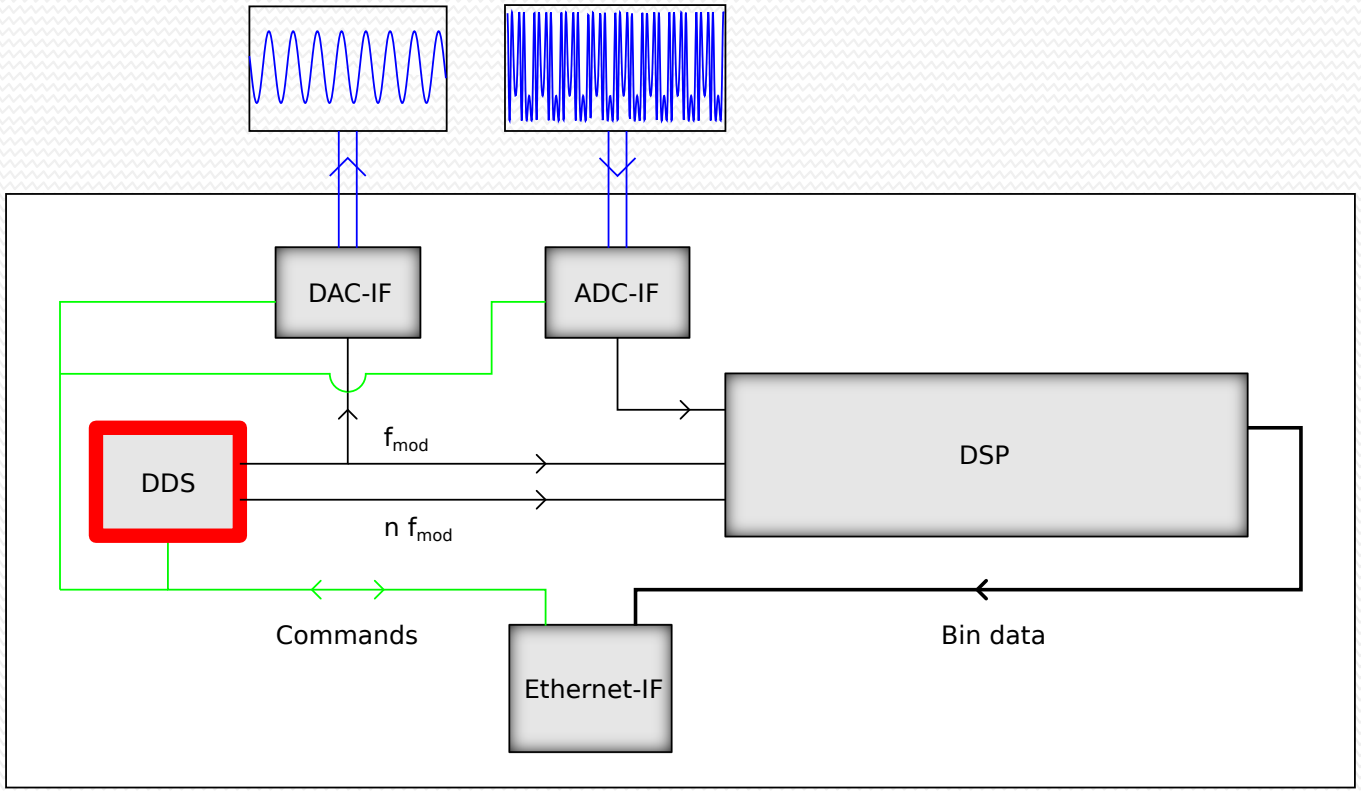

FPGA architecture

- Digital signal processing unit: performing single bin FT

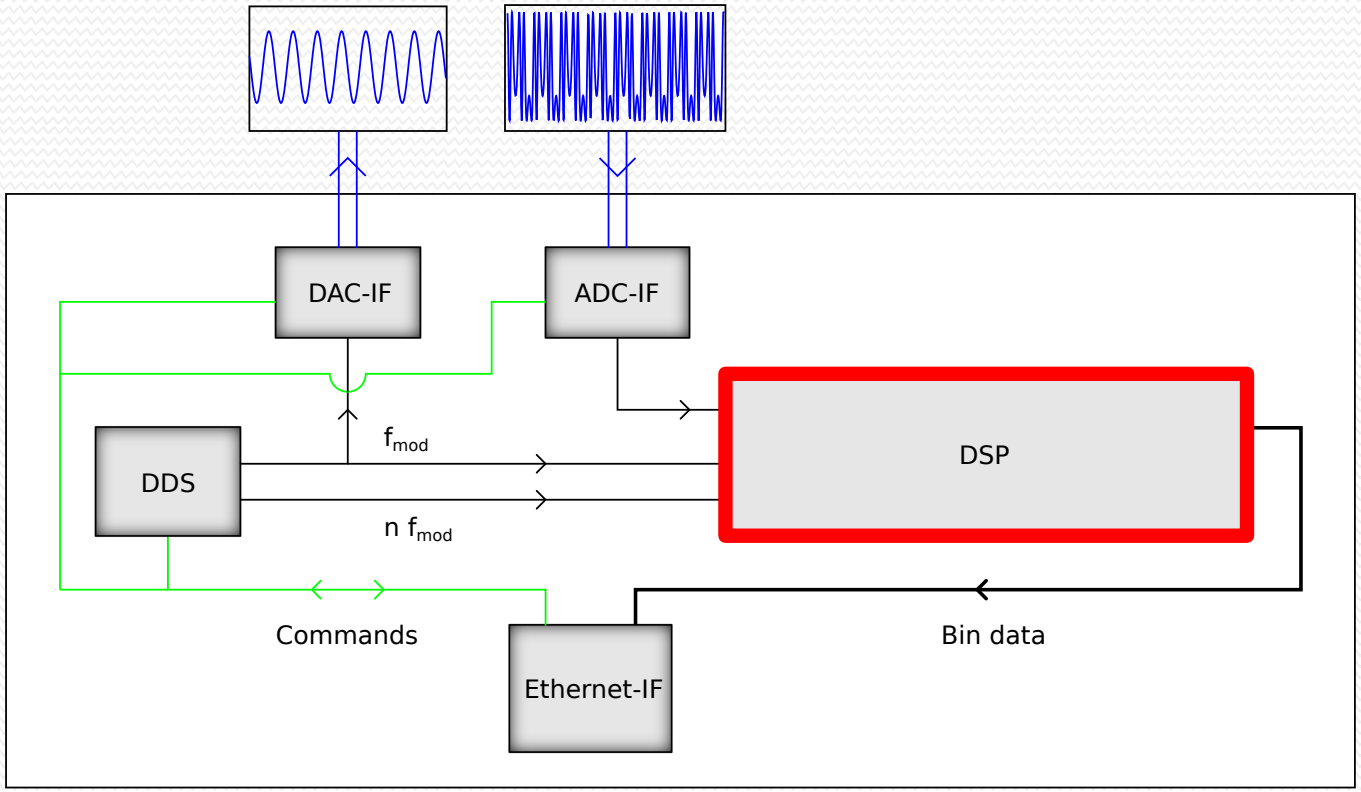

DSP: SBFT

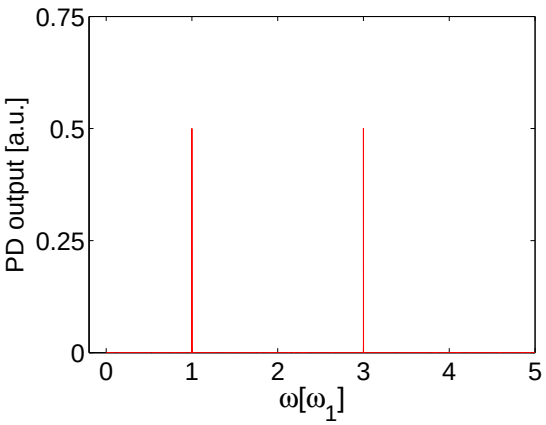
0.75
0.5
0.25
0
PD output [a.u.]
0
1
2
3
4
5
ω[ω1]

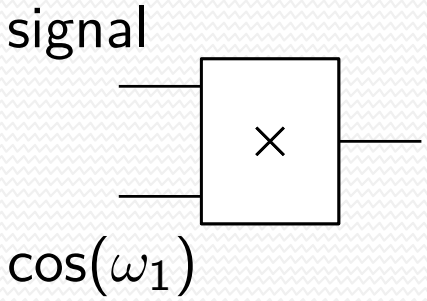
signal
×
cos(ω1)

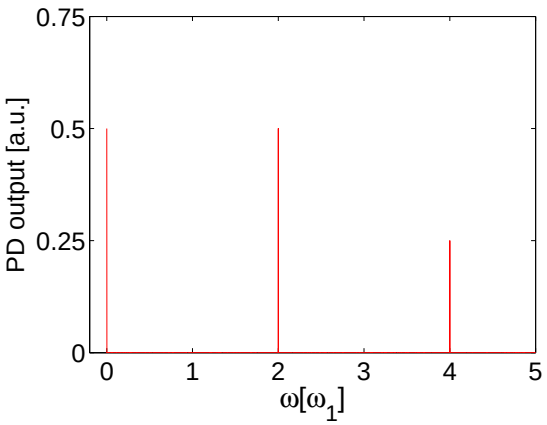
0.75
0.5
0.25
0
PD output [a.u.]
0
1
2
3
4
5
ω[ω1]

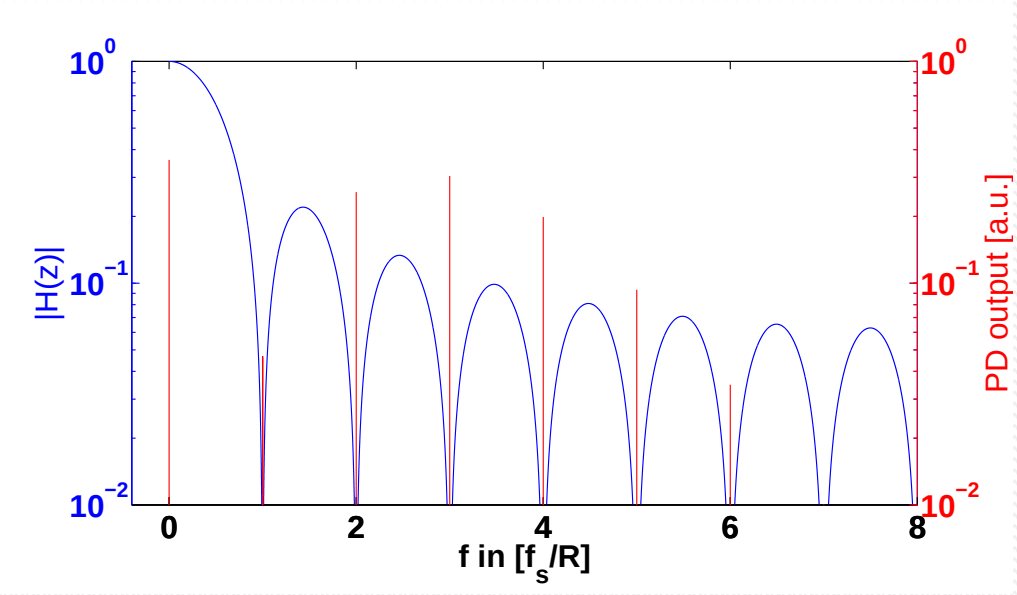
10^0
10^−1
10^−2
|H(z)|
10^0
10^−1
10^−2
PD output [a.u.]
0
2
4
6
8
f in [fs/R]

FPGA architecture

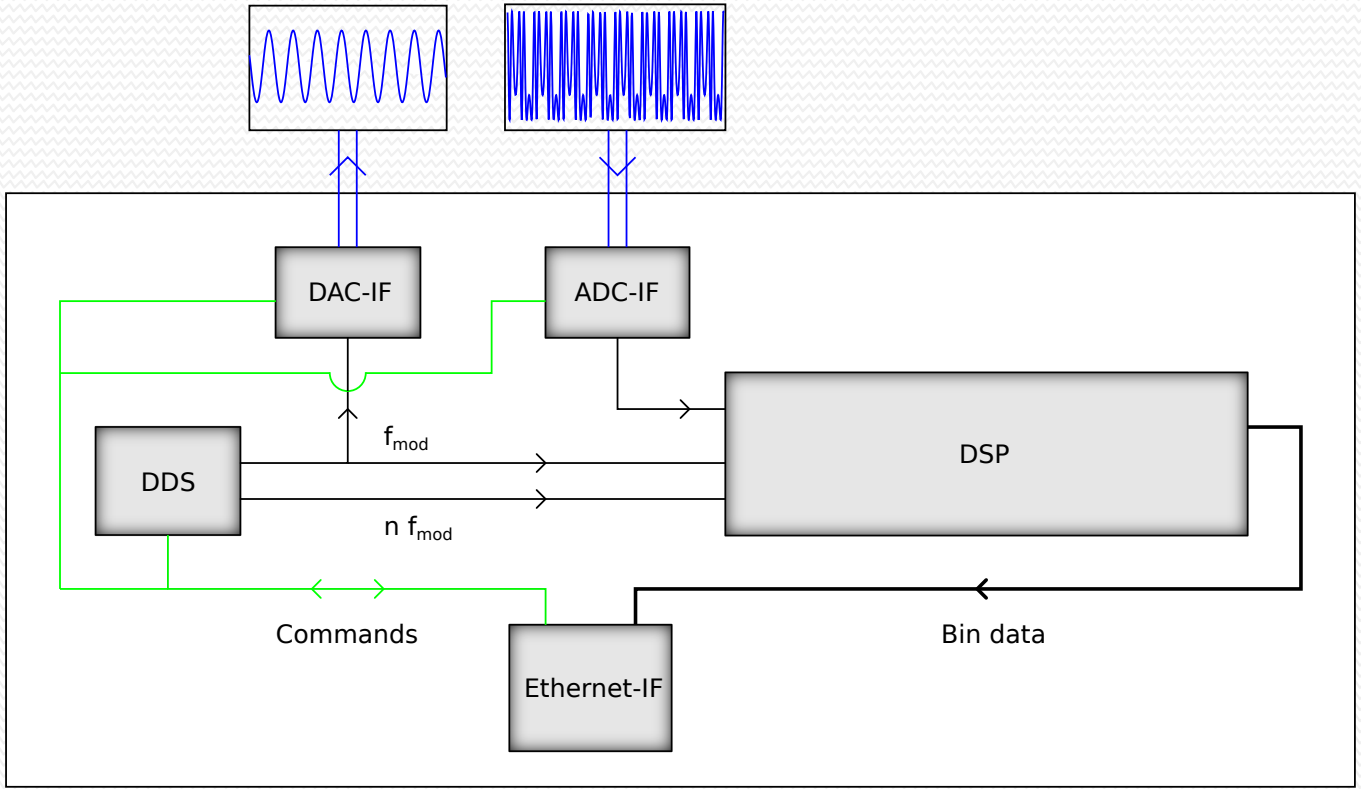

Measurements

Electrical measurement

- Electrical testbed:

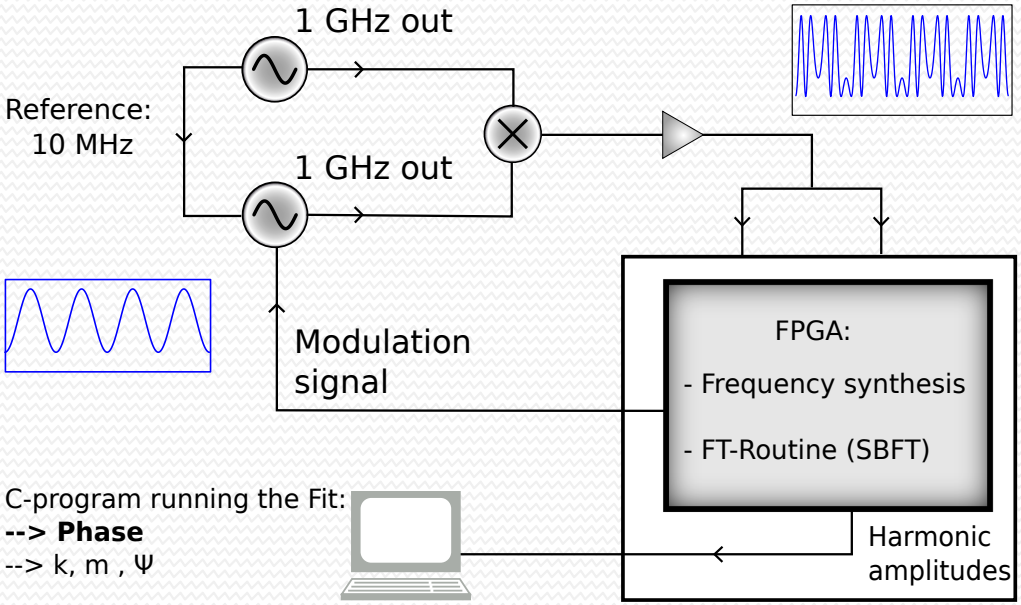

- Analysis scheme:
  - → Null measurement: one signal in two (ADC) channels
  - → $(\varphi_1 - \varphi_2) \stackrel{!}{=} 0$

Electrical null measurement

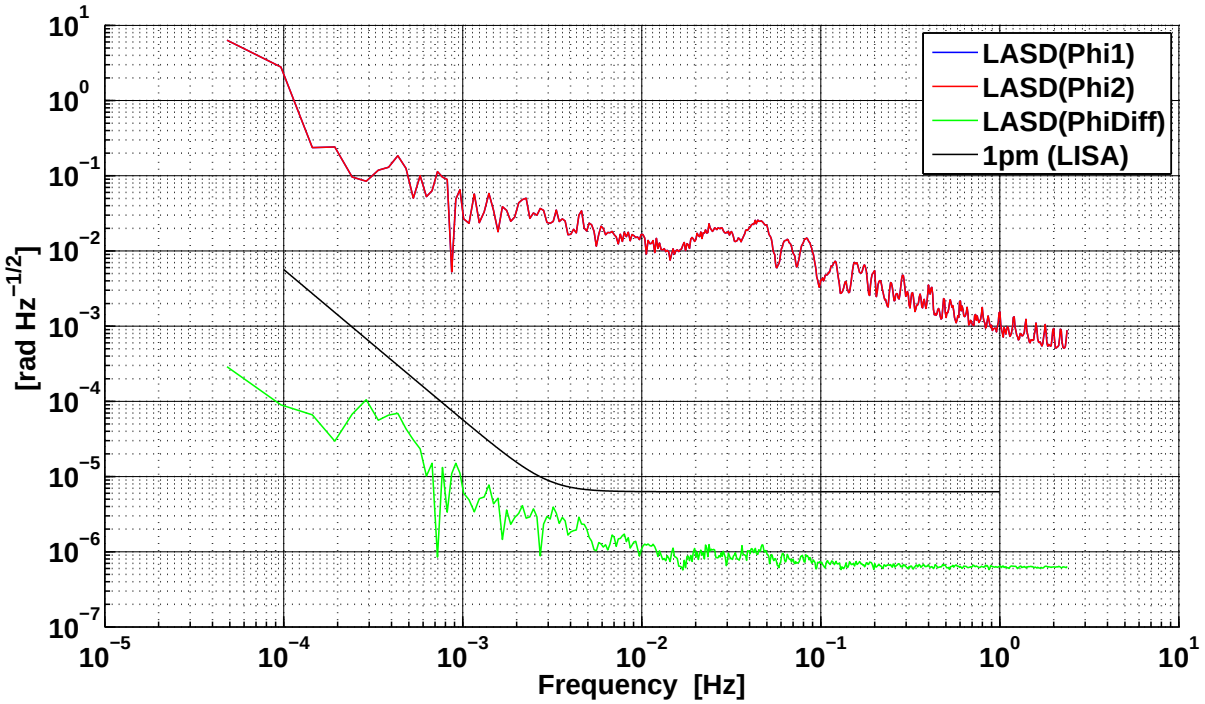

- Performance: $0.8\ \mu\text{rad}/\sqrt{\text{Hz}}$

→ For $\lambda = 1064\,\text{nm}$: $0.14\ \text{pm}/\sqrt{\text{Hz}}$

Optical setup

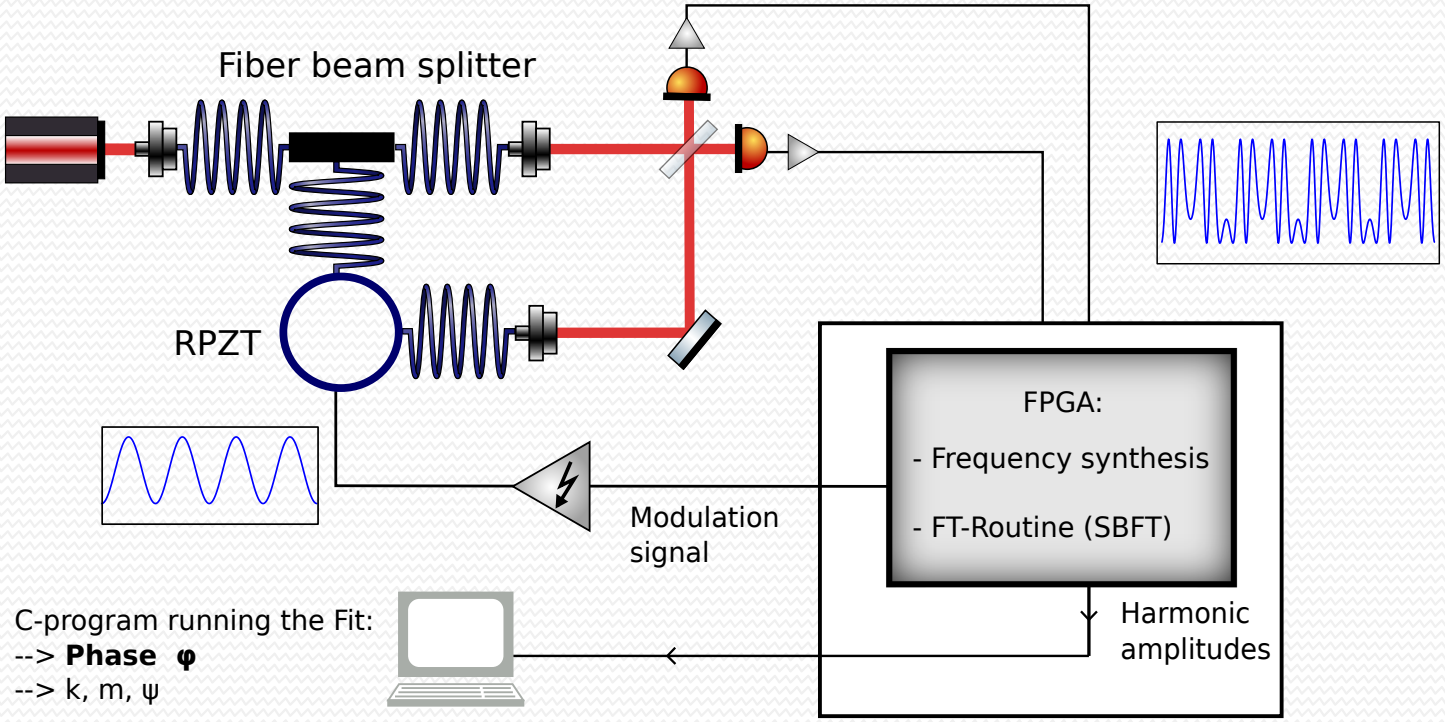

Null measurement with optical setup

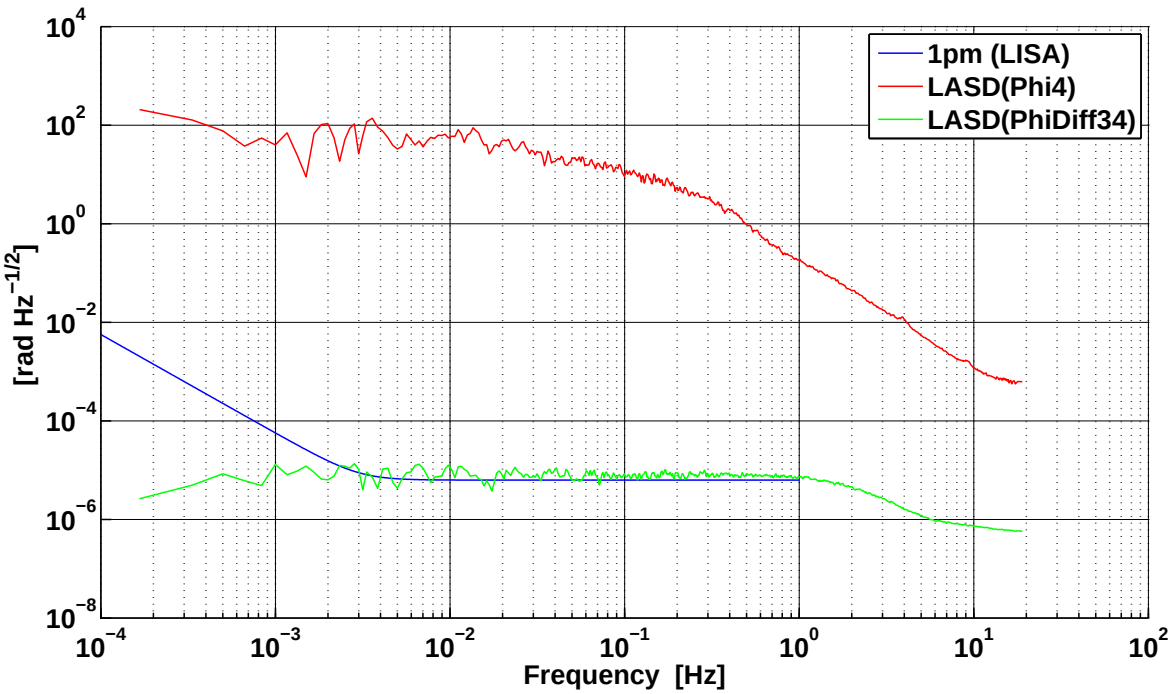

- Performance down to 10 Hz $\rightarrow$ 0.1 pm/$\sqrt{\text{Hz}}$
- Performance below 10 Hz $\rightarrow$ 2.3 pm/$\sqrt{\text{Hz}}$

Paper submitted

Paper submitted to Optics Express

Advanced phasemeter for deep phase modulation interferometry

Thomas Schwarze[1,*], Oliver Gerberding[1], Felipe Guzmán Cervantes[1,2], Gerhard Heinzel[1], Karsten Danzmann[1]

[1]Max-Planck-Institut für Gravitationsphysik (Albert-Einstein-Institut), and Institut für Gravitationsphysik, Leibniz Universität Hannover, Callinstrasse 38, 30167 Hannover, Germany

[2]National Institute of Standards and Technology, 100 Bureau Dr, Gaithersburg, MD 20899, USA

*thomas.schwarze@aei.mpg.de

Abstract: We present the development of an advanced phasemeter for the deep phase modulation interferometry technique. This technique aims for precise length measurements with a high dynamic range using little optical hardware. The advanced phasemeter uses fast ADCs and an FPGA to implement a design of multiple single-bin Fourier transforms running at high sampling rates. Non-linear noise sources in the design were analyzed and suppressed. A null measurement in an electrical testbed showed a sensitivity of 0.8 µrad/$\sqrt{\text{Hz}}$ down to 0.1 Hz. This performance, which corresponds to a displacement sensitivity of 0.14 pm/$\sqrt{\text{Hz}}$, was repeated in a null measurement with optical signals for frequencies above 10 Hz, while for lower frequencies 2.3 pm/$\sqrt{\text{Hz}}$ were achieved. A large dynamic range indicated the possibility to measure with this sensitivity over several fringes.

© 2014 Optical Society of America

OCIS codes: (120.0120) Instrumentation, measurement, and metrology, (120.3180) Interferometry, (120.4640) Optical instruments, (120.5050) Phase measurement, (120.5060) Phase modulation

Conclusions

Conclusions

- DPMI: precise interferometric measurement of length changes
  - High dynamic range
  - Compact optical setup
- Principle: Measurement phase "encoded" in several frequency bins
- Phasemeter: FPGA-based setup, providing high sampling and processing speed
  - → Lower ADC noise
- Null measurement with optical setup: 2.3 pm/$\sqrt{\text{Hz}}$ up to 10 Hz and 0.1 pm/$\sqrt{\text{Hz}}$ above

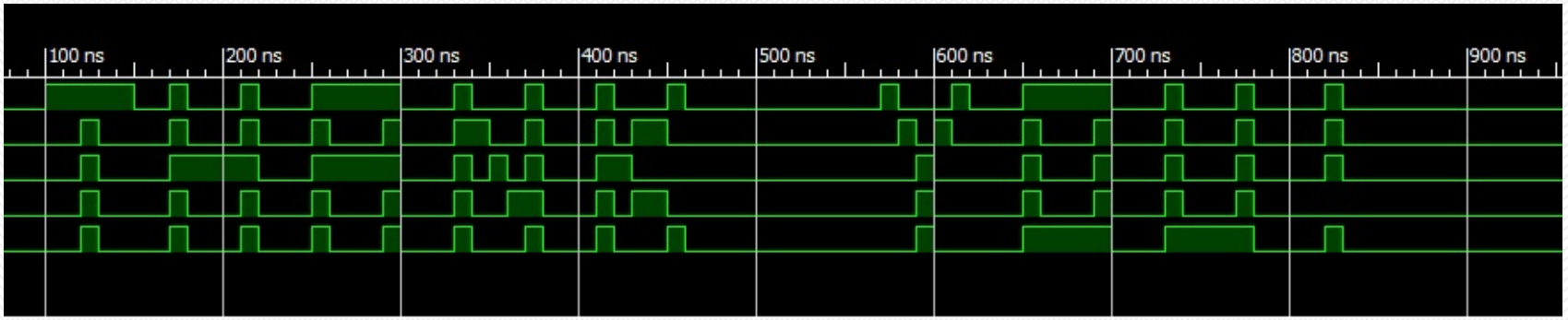

facebook.com/
LISAcommunity

twitter.com/
LISAcommunity

google.com/
+LisaMissionOrg

www.elisascience.org