The measurement performance evaluation of phase-meter prototype with reference signal

Li Yuqiong[1] Liu Heshan[1,2] Luo Ziren[1] Dong Yuhui[1,2] Jin Gang[1*]

[1]Institute of Mechanics, Chinese Academy of Sciences, Beijing
[2]University of Chinese Academy of Sciences, Beijing
Corresponding author: gajin@imech.ac.cn

Hilton Conference Center , Gainesville, Florida, USA
May 22rd, 2014

Outline

1. Introduction
2. Motivation
3. Design and architecture
4. Noise analysis and discussions
5. Conclusions

1. Introduction

- ➢ Verifying the Einstein's general theory of relativity[1].
- ➢ Complementing electromagnetic method to detect farther and earlier universe[3].
- ➢ Opening a new window for probing the universe[2].

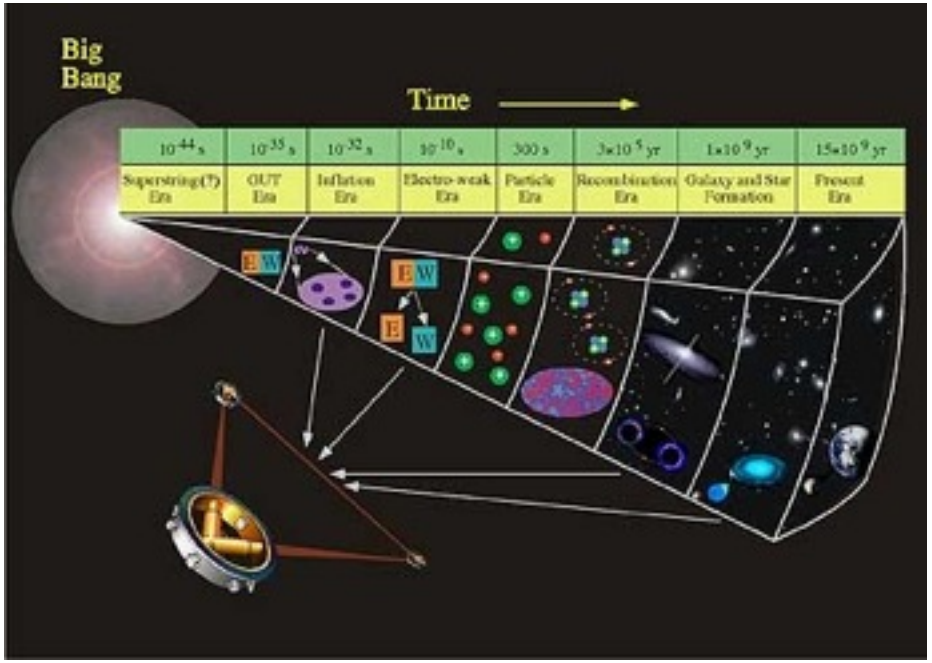

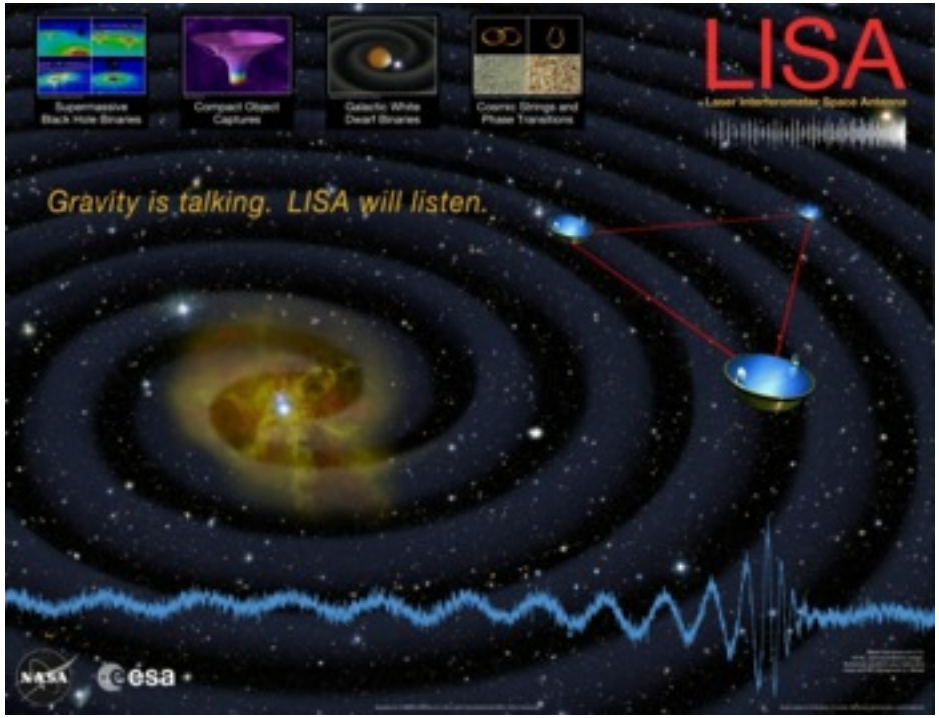

- ➢ Looking for the signals emitting from the super-mass black holes in-spirals harbored in oldest galaxies or the black hole binaries formed by the relic of pop III stars[4].

1. K. Danzmann for the LISA Study Team, *Class. Quantum Grav.* **14**, 1399 (1997).
2. N. Seto, S. Kawamura, and T. Nakamura, *Phys. Rev. Lett.* **87**, 221103 (2001).
3. K. Danzmann and A. Rüdiger, *Class. Quantum Grav.* **20**, S1 (2003).
4. P. Amaro-Seoane, S. Aoudia, S. Babak, et al., *Class. Quantum Grav.* **29**(12) 124016 (2012).

2. Motivation

Heterodyne Laser Interferometer

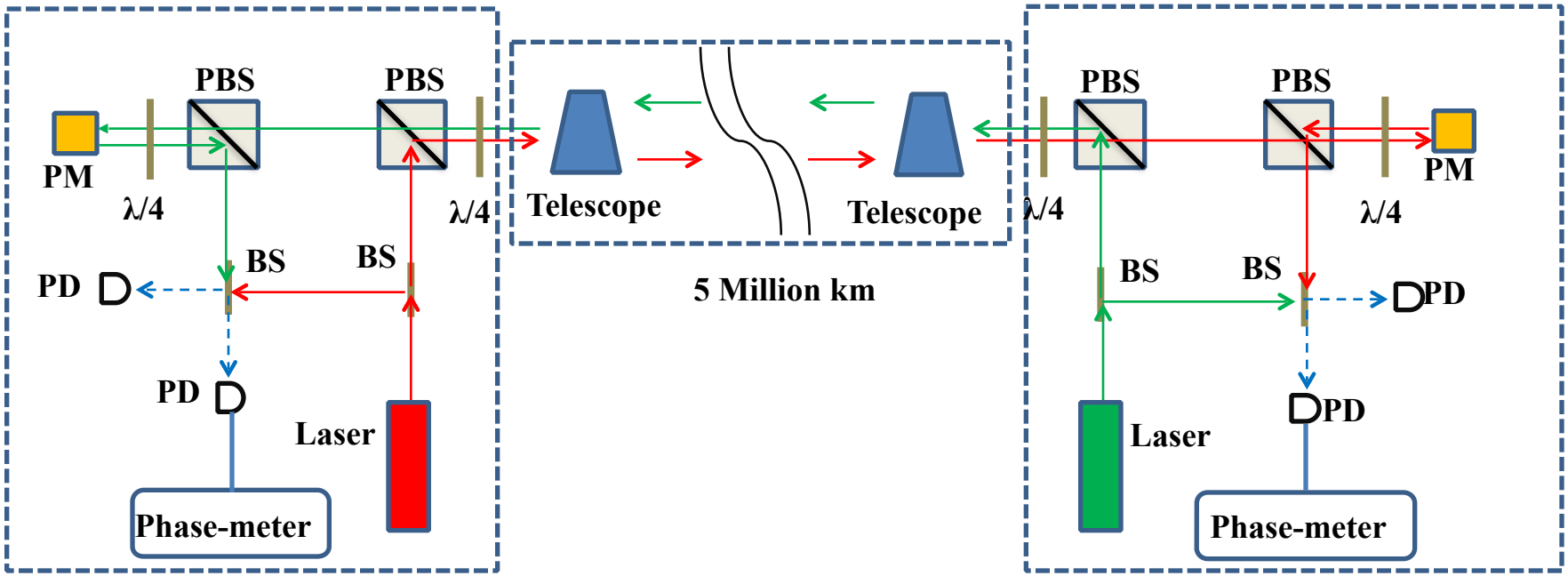

PM: Proof mass; PBS: Polarized beam splitter; BS: 50/50 Beam splitter; PD: Photo-detector

The relation between path-length fluctuation and interferometer's phase change is following:

$$\Delta L = \frac{\Delta\varphi}{2\pi}\lambda$$

The precision of phase-meter is required to be better than **2π μrad/$\sqrt{\text{Hz}}$**.

Traditional phase measurement methods

- ➢ **Zero-crossing[1,2]**
- ➢ **Cross-correlation[3]**

The above two methods are not suitable for the wide Doppler shift in LISA mission.

Digital phase-locked loop[4] (DPLL)

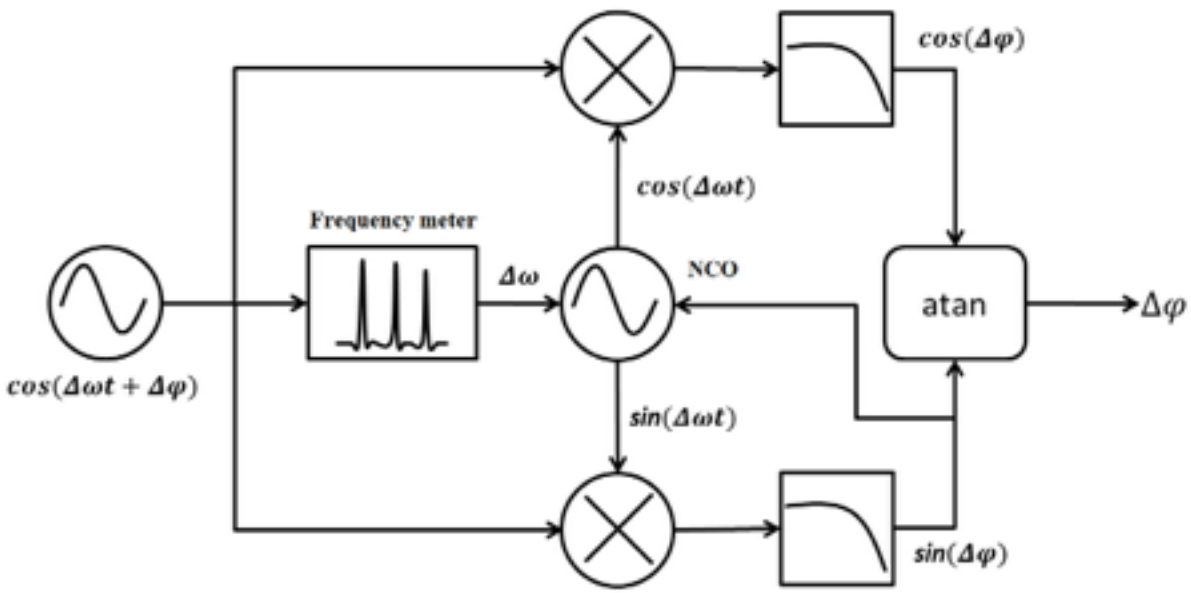

1. S. E. Pollack, O. Jennrich, R. T. Stebbins and P. Bender, *Class. Quantum Grav.* **20** S193 (2003)
2. S. E. Pollack, R. T. Stebbins, *Class. Quantum Grav.* **23** 4189 (2006)
3. H. C. Yeh, Q. Z. Yan, Y. R. Liang, et al., *Rev. Sci. Instrum.* **82** 044501 (2011)
4. H.S. Liu, Y. H. Dong, Y. Q. Li, et al., *Review of Scientific Instruments* 85 024503 (2014)

3. Design and architecture

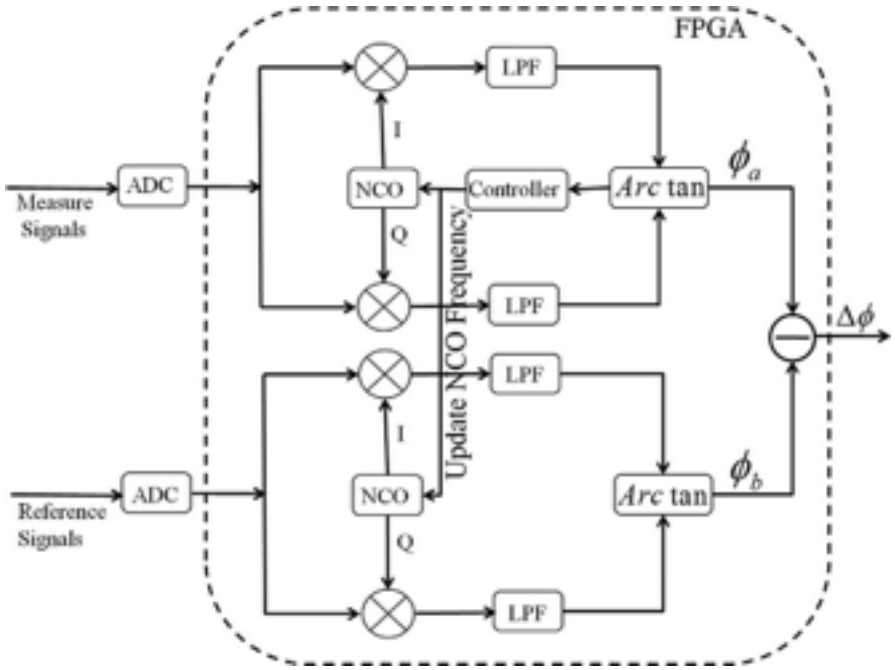

Implemented on a commercial FPGA platform

(Field Programmable Gate Array)

- ✓ Digitized by the ADCs (analog to digital converters).
- ✓ Multiplied by the NCO (numerically controlled oscillator) with quadrature signals.
- ✓ Filtered by the LPF (low-pass filter) to remove the multiplied frequency components.
- ✓ Reconstructed by arctangent calculation.
- ✓ Update the frequency of the NCO.
- ✓ Subtracted to remove the common-mode noise.
- ✓ Phase difference information is obtained.

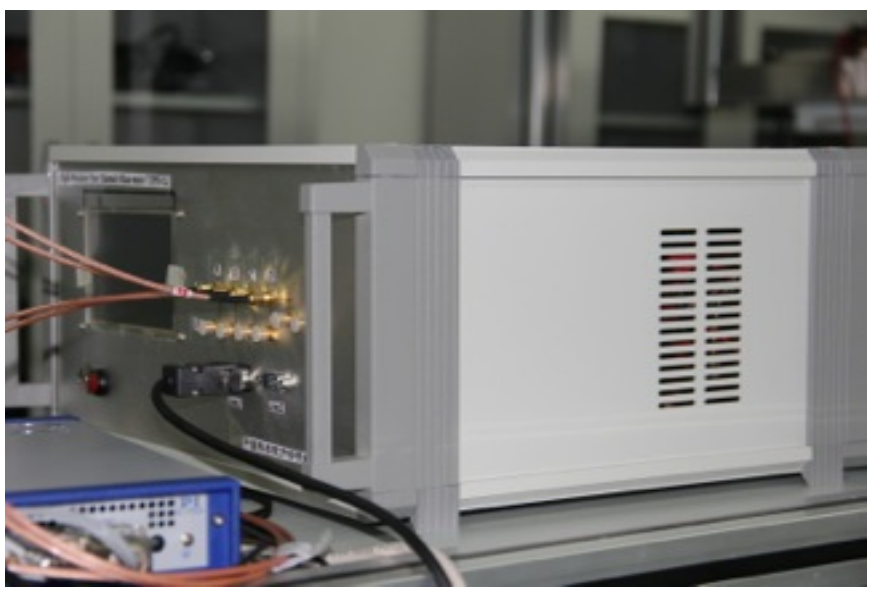

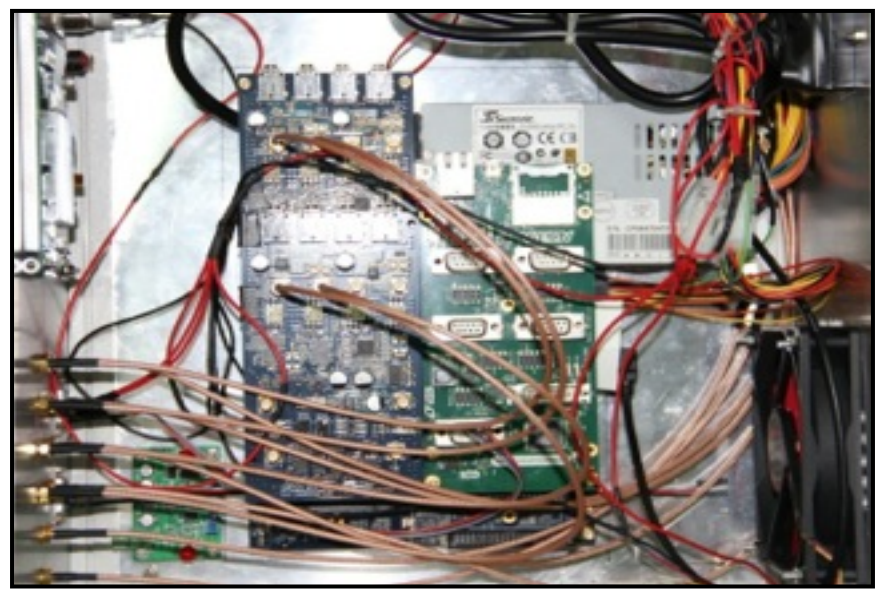

4. Noise analysis and discussions

There are three kinds of noises affect the precision of the phasemeter's readout:

✓ **Signal noises**

laser frequency jitter noise

electronic device noise

……

Not in the consideration

✓ **Coupled noises**

Frequency change of the detected signal

Temperature drift in the environment

……

✓ **Internal noises**

Sampling jitter noise

Quantization noise

Loop noise

……..

Discussed during the next step

Coupled noises

Signals will have phase shifts when pass though the analog circuit, which vary along with the frequency changing and the temperature drifting.

✓ Frequency change

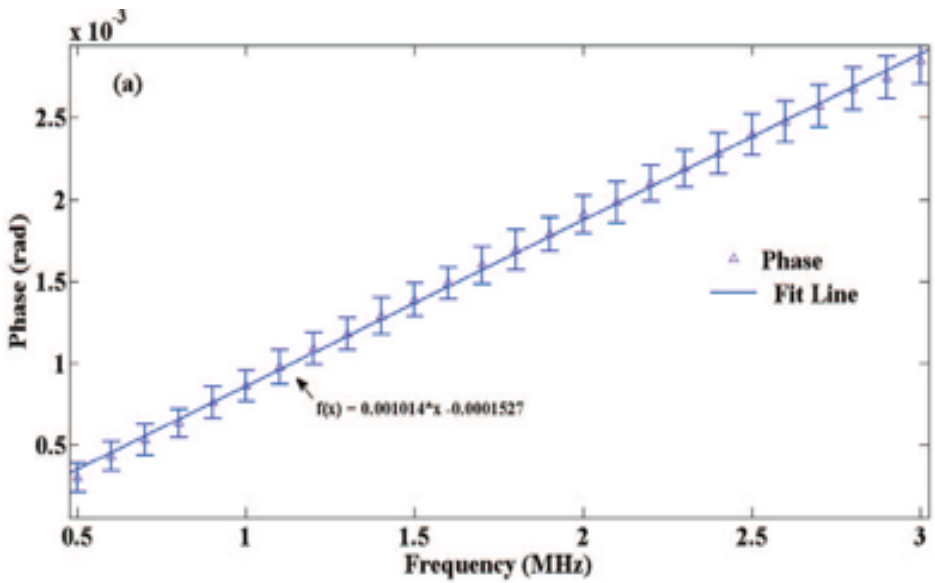

The phase noise increases in a linear function with the frequency.

✓ Temperature drift

- Natural environment: the condition without any thermal insulation, where the temperature fluctuates about a few degrees.
- Thermal insulation: using some simple thermal insulation methods, of which the temperature fluctuation is no more than 0.2°C.

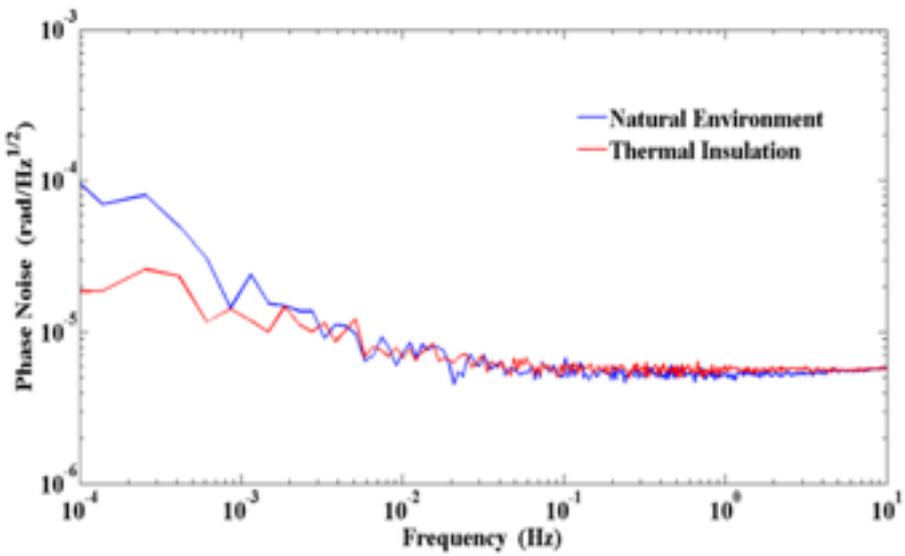

Internal noises

➢ Sampling jitter noise

When sampling the detected signal with ADC, the frequency variance of local oscillator will introduce phase noise into the sampled signal.

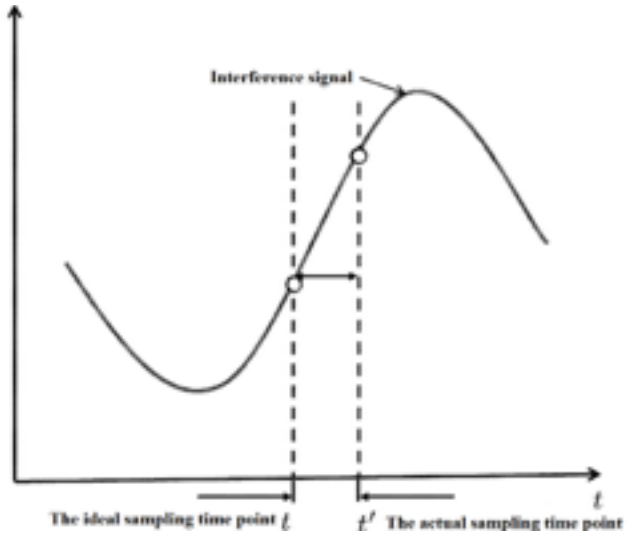

$$\delta_{\varphi} = \delta_t \times f_b$$

δ_t, the sampling time error of ADC; f_b, the frequency of tested signal.

The frequency stability of the USO δ_t is better than 10^{-12}, for a 1 MHz signal, the absolute value is no more than $2\pi*10^{-6}$ rad.

➢ Quantization noise

$$\sigma_q = \frac{1}{\pi 2^N \sqrt{6 f_s}}$$

The quantization noise σ_q is a function of sampling rate f_s and number of bits 2^N.

With a 14 bit of ADC sampling at 100 MHz in the phase-meter, the quantization noise is less than 10^{-8} rad/√Hz.

➢ Loop noise

The detected signal is produced by another NCO in the same FPGA, and doesn't pass through the frontend part.

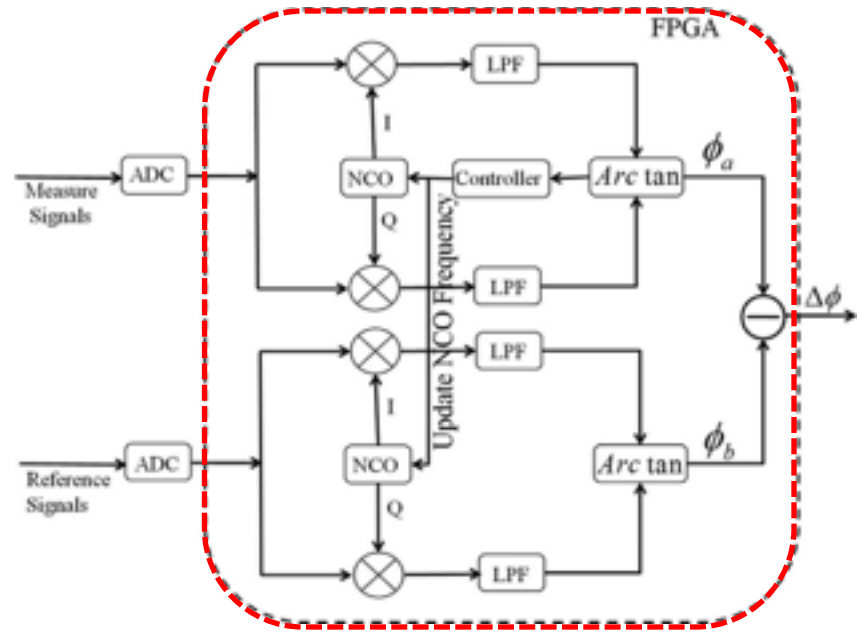

Including the feedback loop noise and algorithm noise.

$$\text{Feedback loop noise} = \frac{\text{Error function}}{\text{Gain}} \text{ [1]}$$

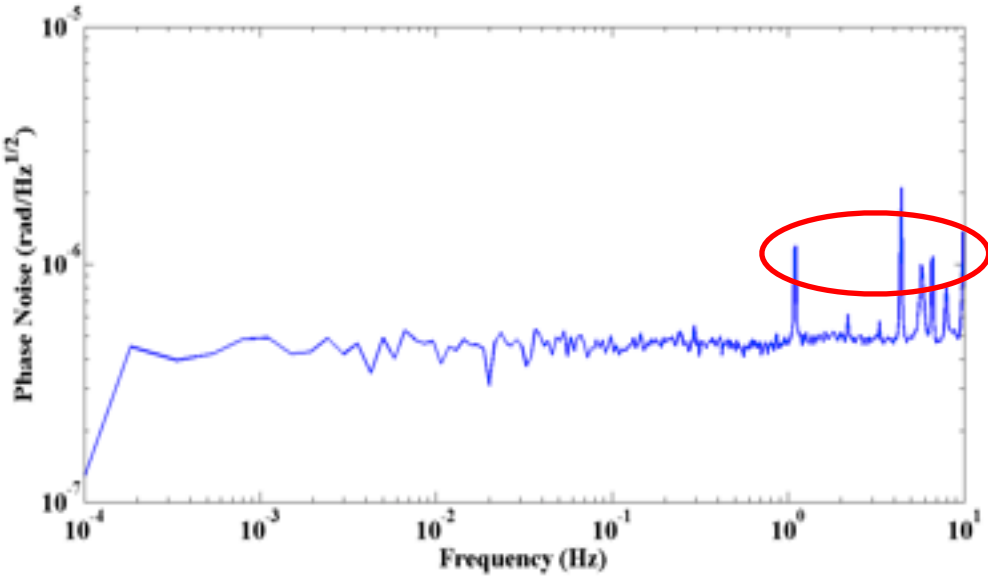

Resulted from the differential frequency between the detected signal and the NCO signal.

Lower than 10^{-6}rad/√Hz

[1] O. Gerberding, B. Sheard, I. Bykov, et al. *Class. Quantum Grav.* **30** 235029 (2013).

Measurement performance

A 1 MHz frequency of signal produced from the function generator has been chosen to characterize the performance of the phase-meter prototype.

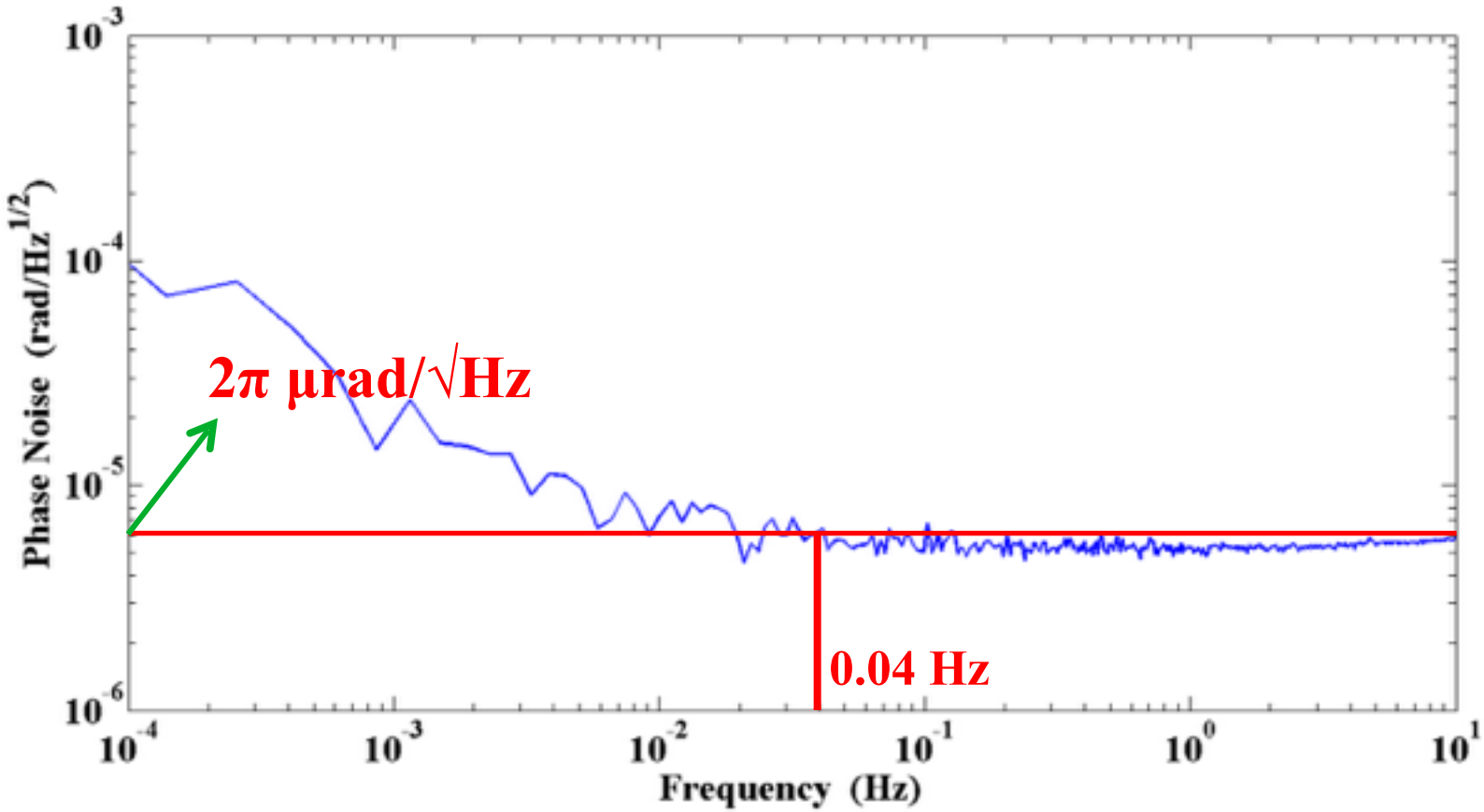

The phase sensitivity is achieved 2π μrad/√Hz in the frequencies from 0.04 Hz to 10 Hz.

5. Conclusions

- ✓ The phase sensitivity is achieved 2π μrad/√Hz in the frequencies from 0.04 Hz to 10 Hz, and the noise increase obviously in the frequency blew 0.04 Hz for the thermal noise.
- ✓ Just beginning, the prototype can't meet the requirement of the LISA mission to extract the length information, because the LISA can't introduce the reference optical path.
- ✓ However, the prototype can be used for path-length fluctuation measurement in laser interferometer on-ground demonstration and beam pointing mission (≥four channels).
- ✓ The process of identifying and removing noise to make the phase-meter meet the LISA or related missions requirements in our group will be continued……

Thanks for your attentions!