Study of the Optimum Momentum Resolution of CMS Experiment

Presented by:
Timothy McDonald
Faculty Mentor:
Darin Acosta

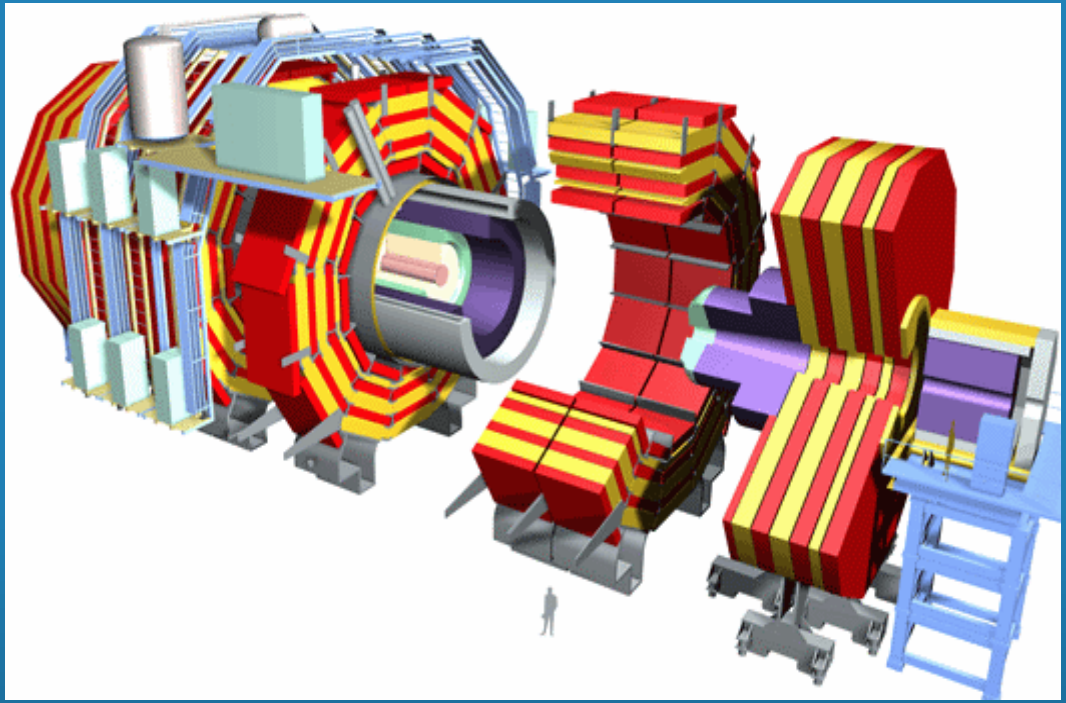

The Compact Muon Solenoid

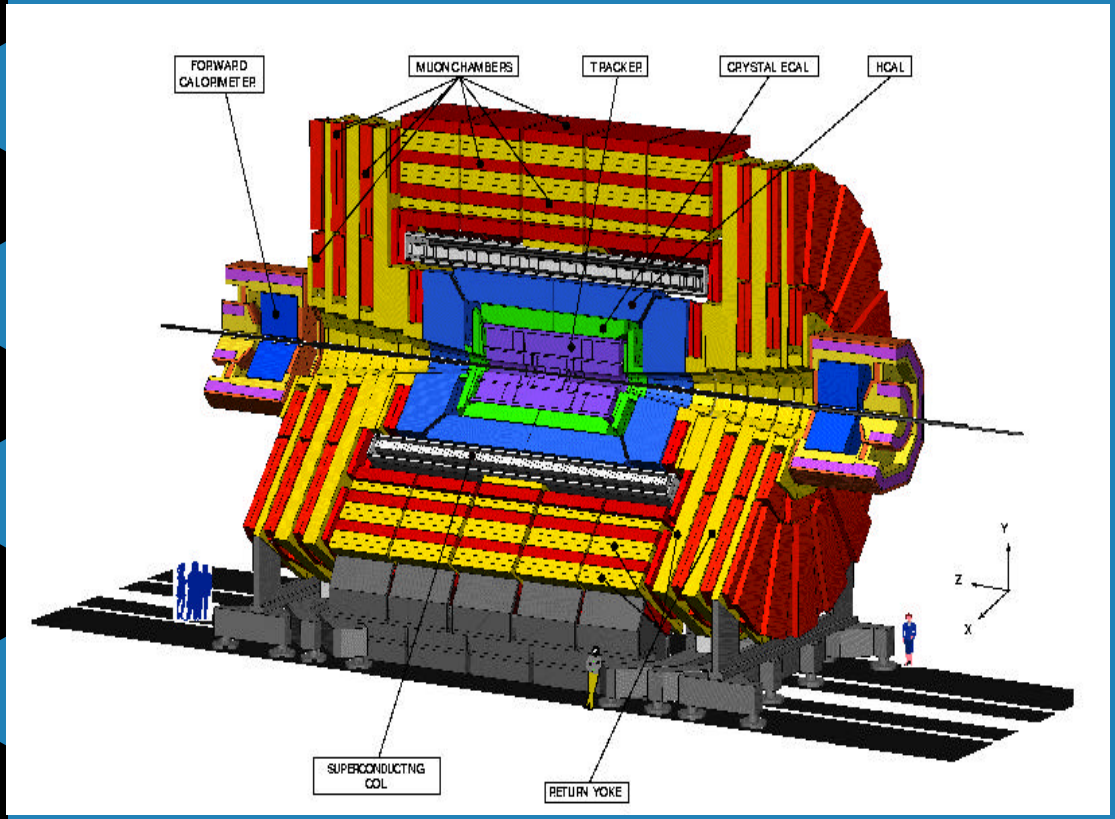

- To be completed 2005 at CERN
- At Large Hadron Collider
- Collides proton bunches at 7 times Fermilab energy (7 TeV)

The Compact Muon Solenoid

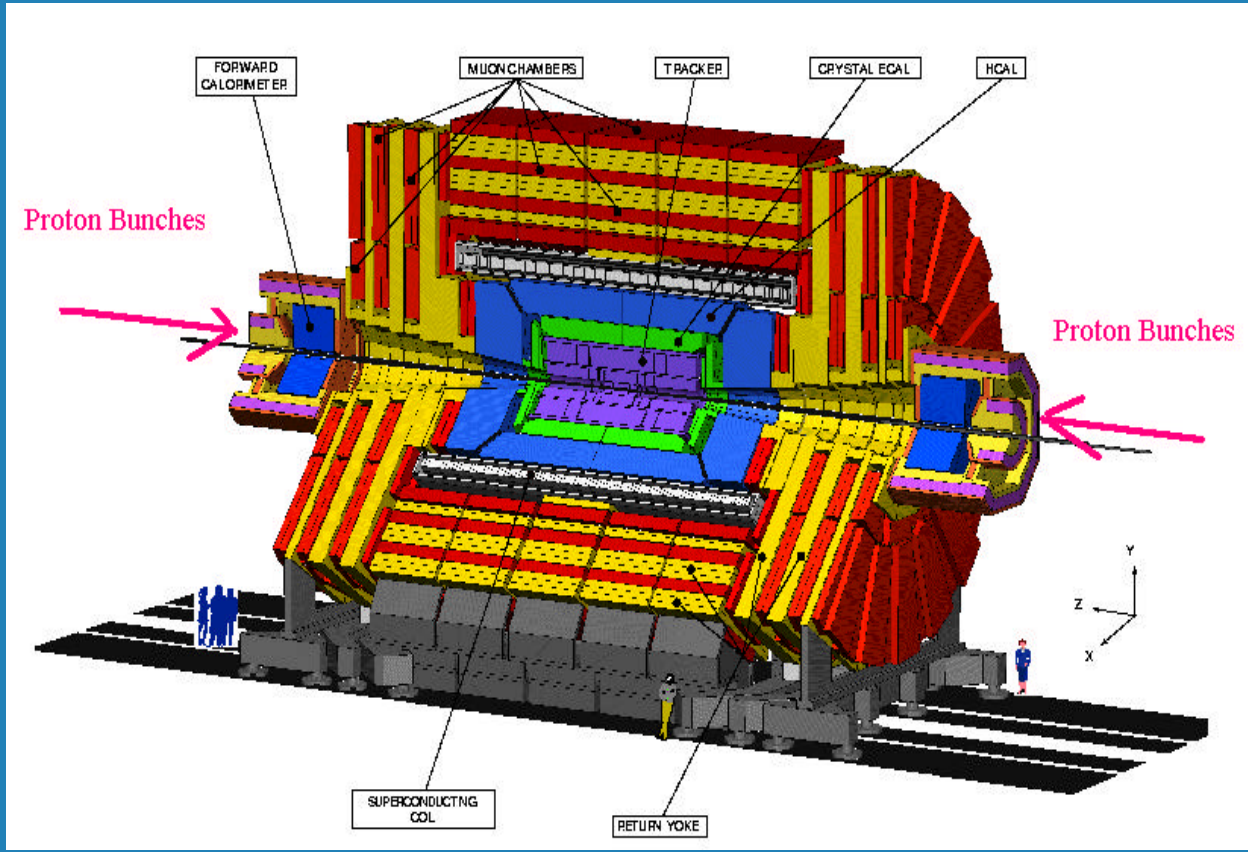

The Compact Muon Solenoid

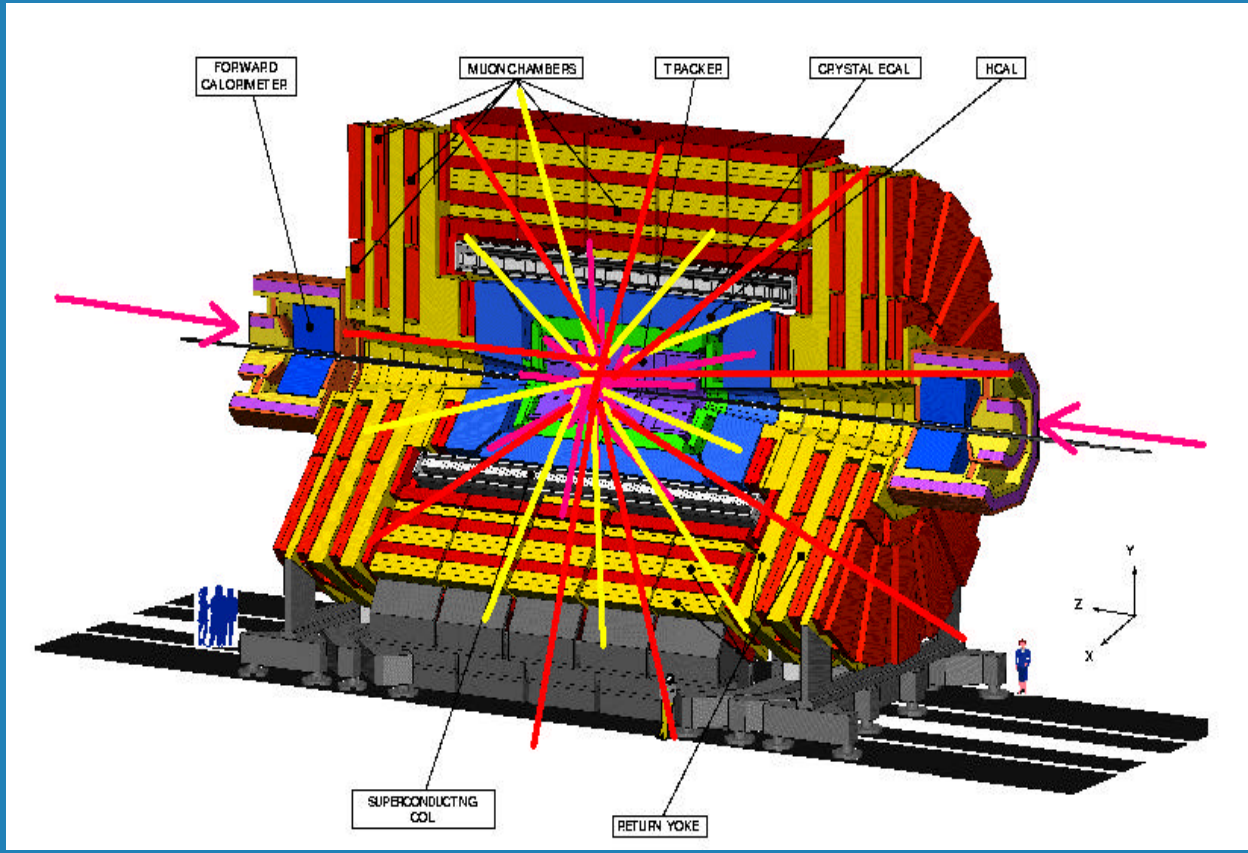

Project focus Endcap Muon System

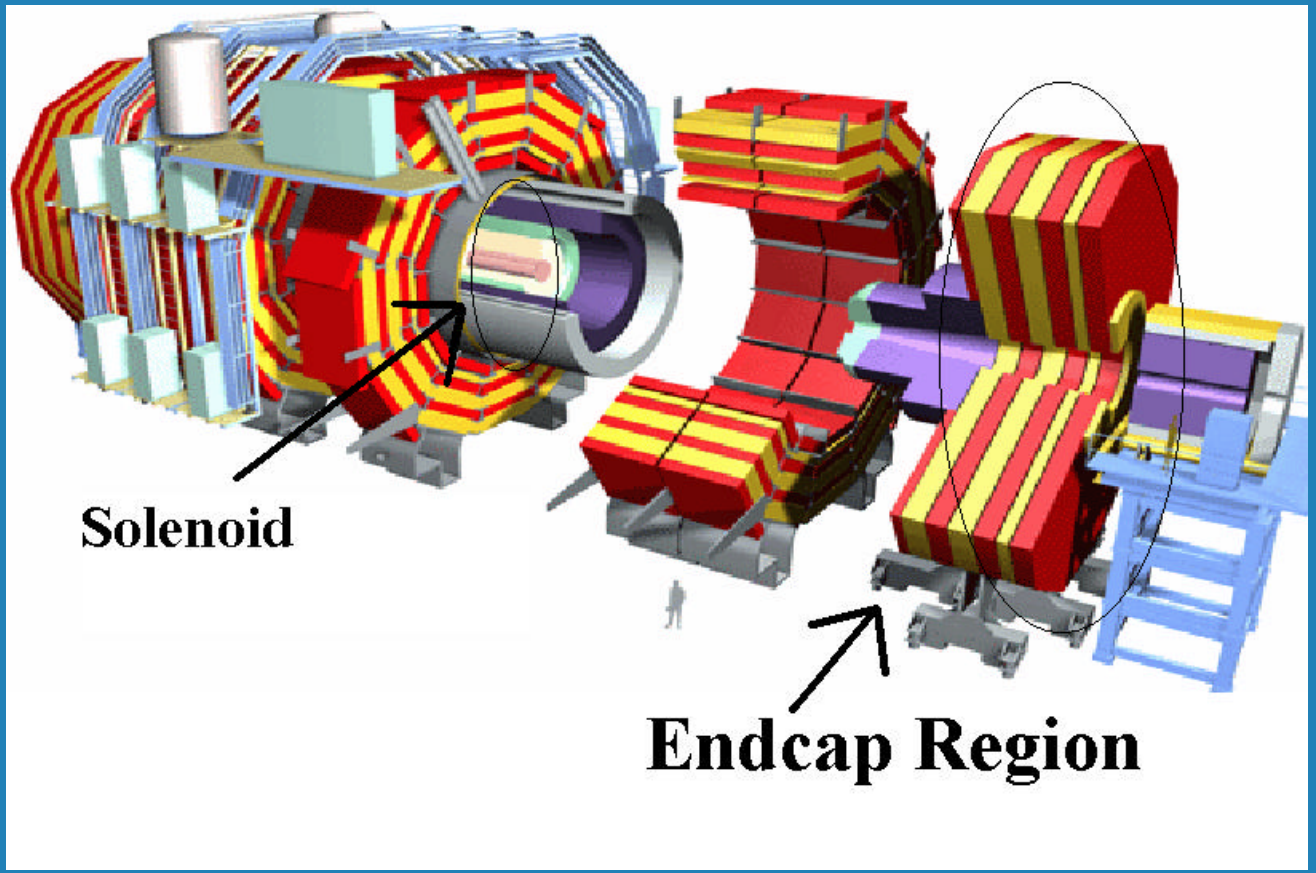

CMS Endcap Muon System

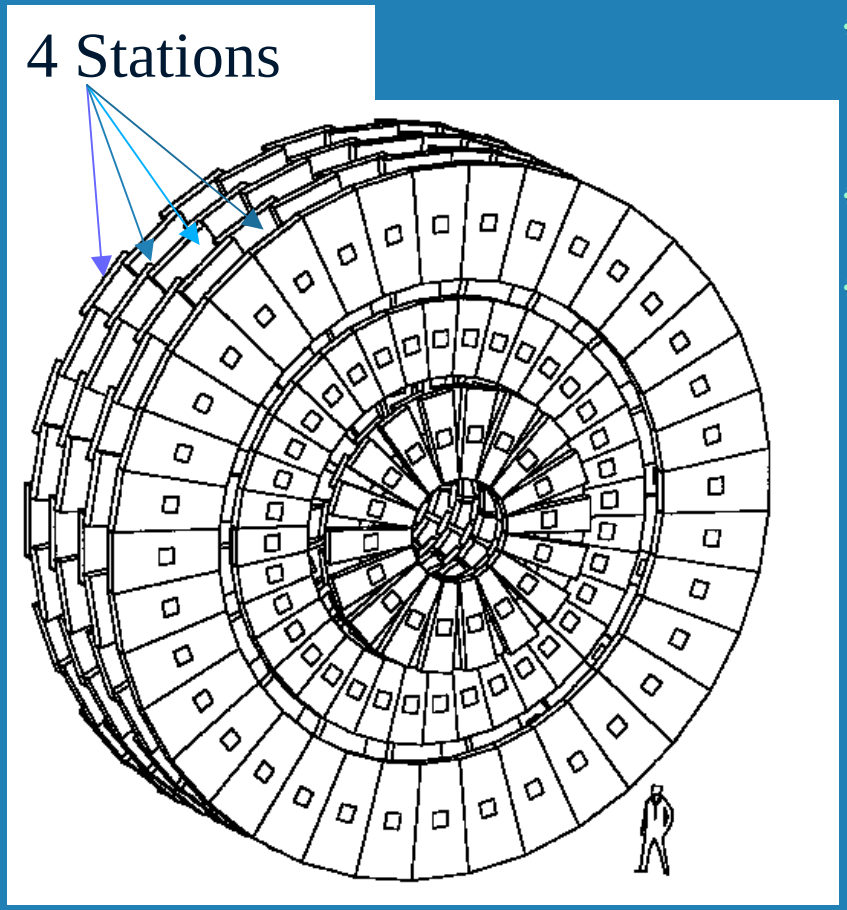

- Disk composed of 10^0 or 20^0 muon detectors
- Four stations of detectors
- Predominantly Only muons penetrate this much iron

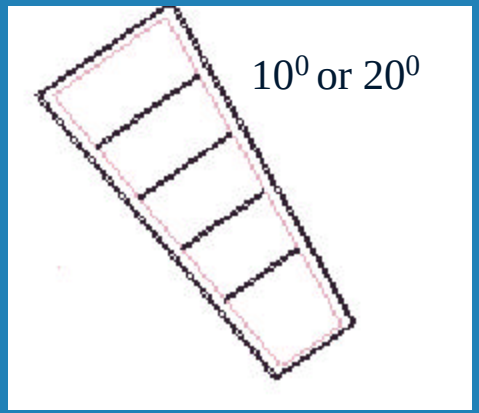

Endcap Detector Station

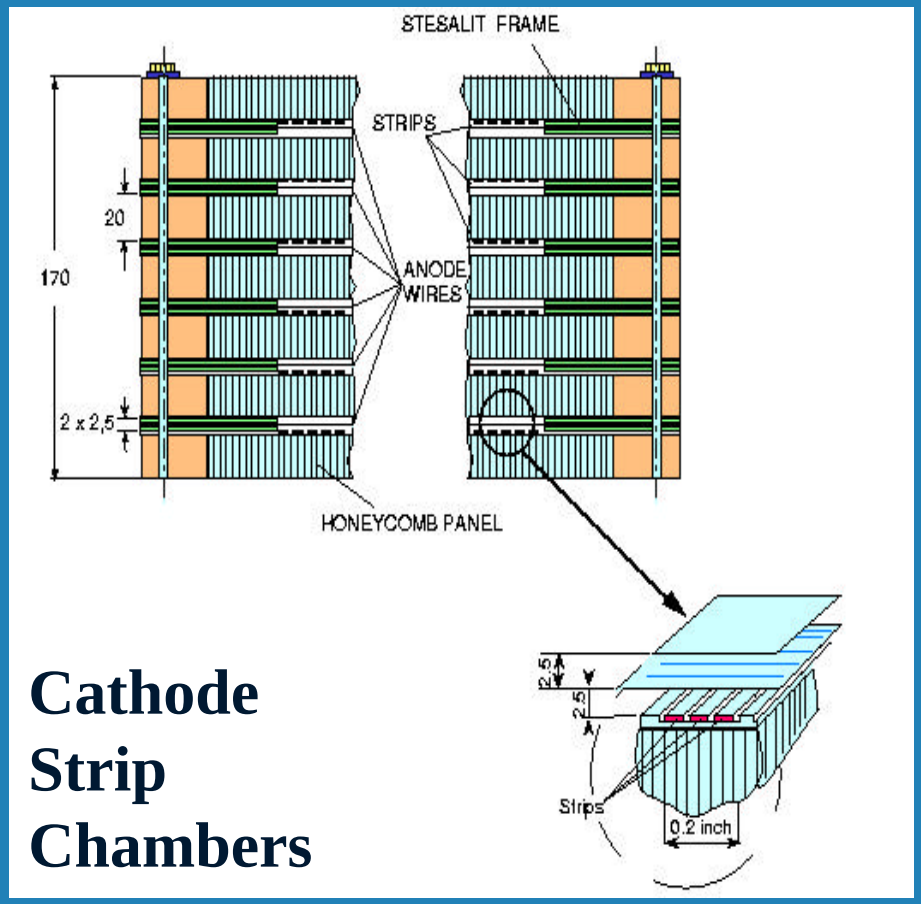

Cathode Strip Chambers

- Each Station Contains 6 cathode strip chambers
- Anode wires: polar angle theta
- Cathode strips: azimuthal angle phi

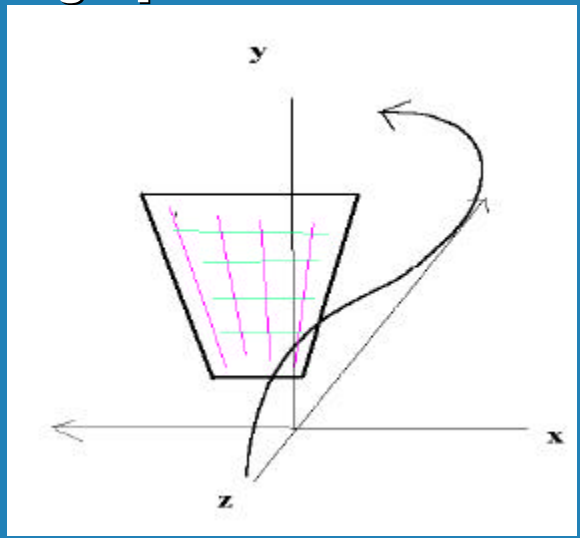

More data is produced than can be easily handled

- 40,000,000 collisions per second
- 1 megabyte of data per collision bunch
- 40 terabytes of data per second

Need to measure Muon Momentum

- Trigger must select interesting events (Higgs, Z, W Bosons)
- Heavy, interesting particles often decay into high momentum muons
- Trigger must quickly measure muon momentum

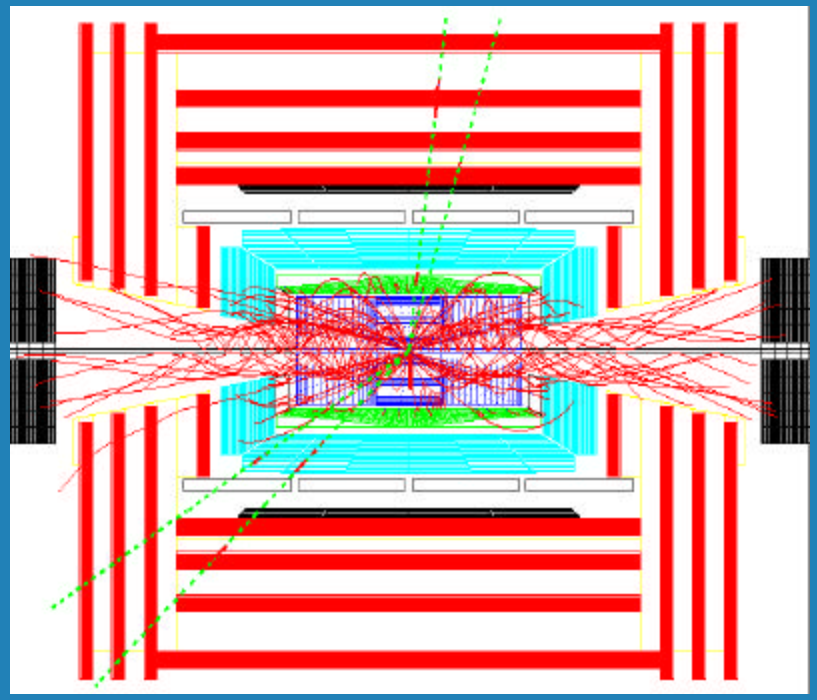

Resolution Goals

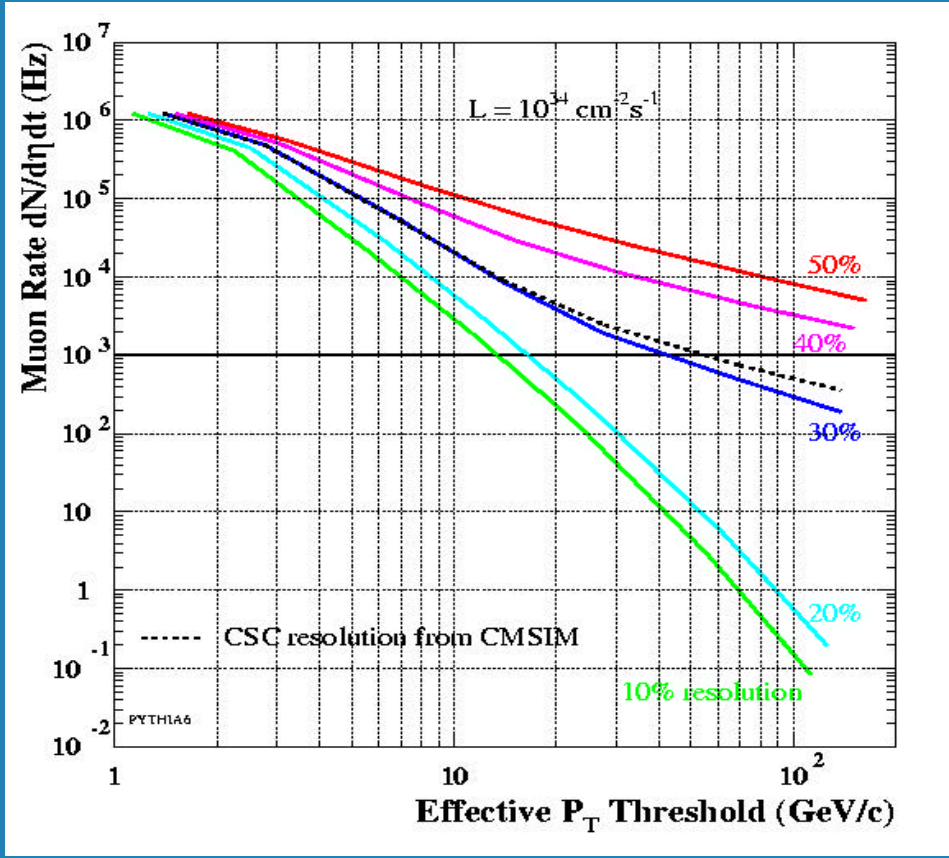

Amount of Bending Proportional to Momentum

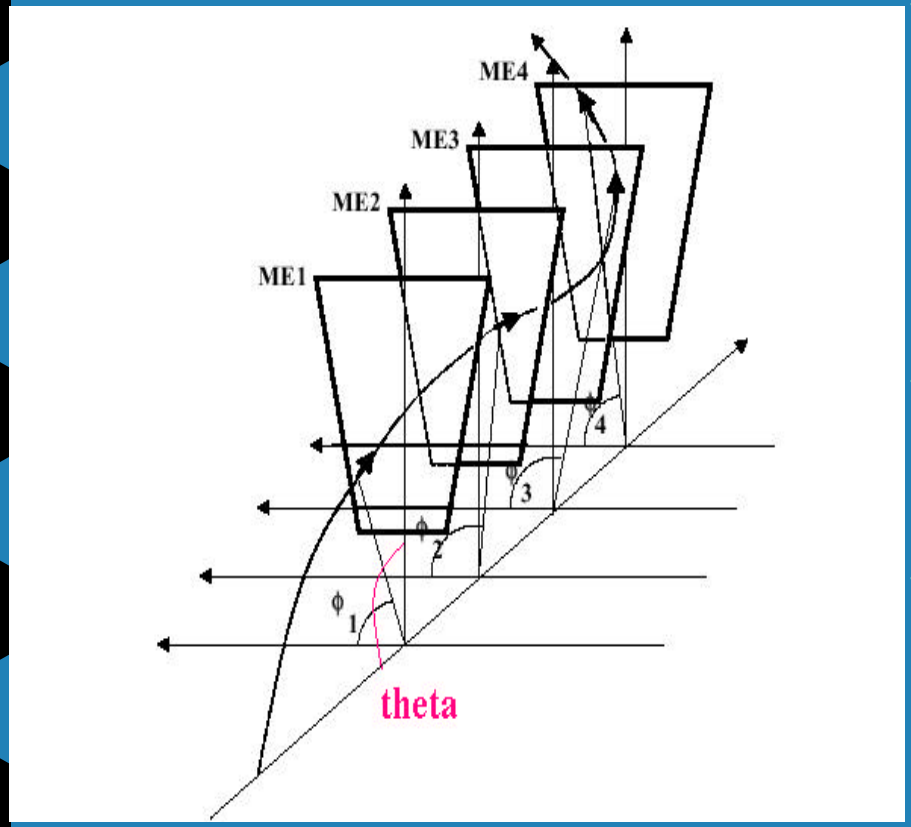

- 4 tesla magnet bends escaping charged particles in azimuthal direction
- high momentum muons bend less
- momentum can be obtained based on bending between four detector stations

Parameterize momentum as a function of measurements

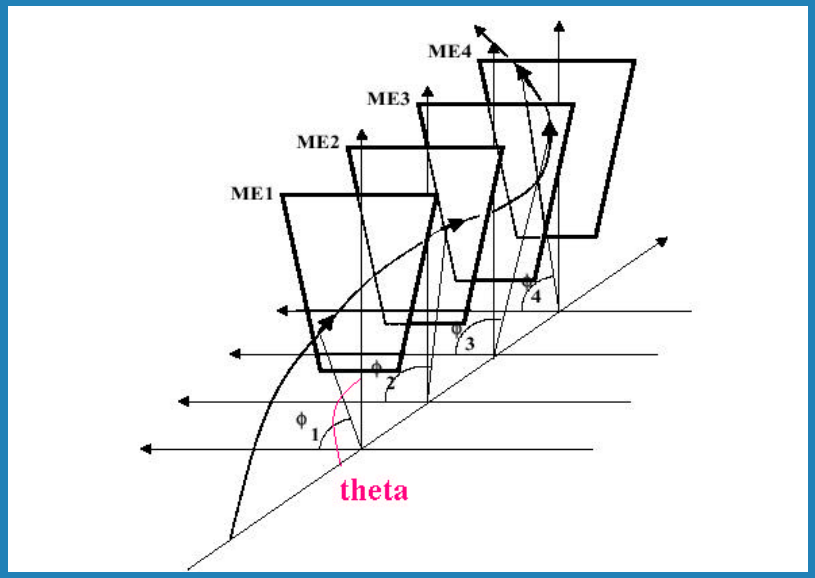

- Can use 2,3, or 4 detector stations
- Must consider change in azimuthal angle
- Must consider the polar angle as well
- Use simulation data to determine constants

Different rapidity regions

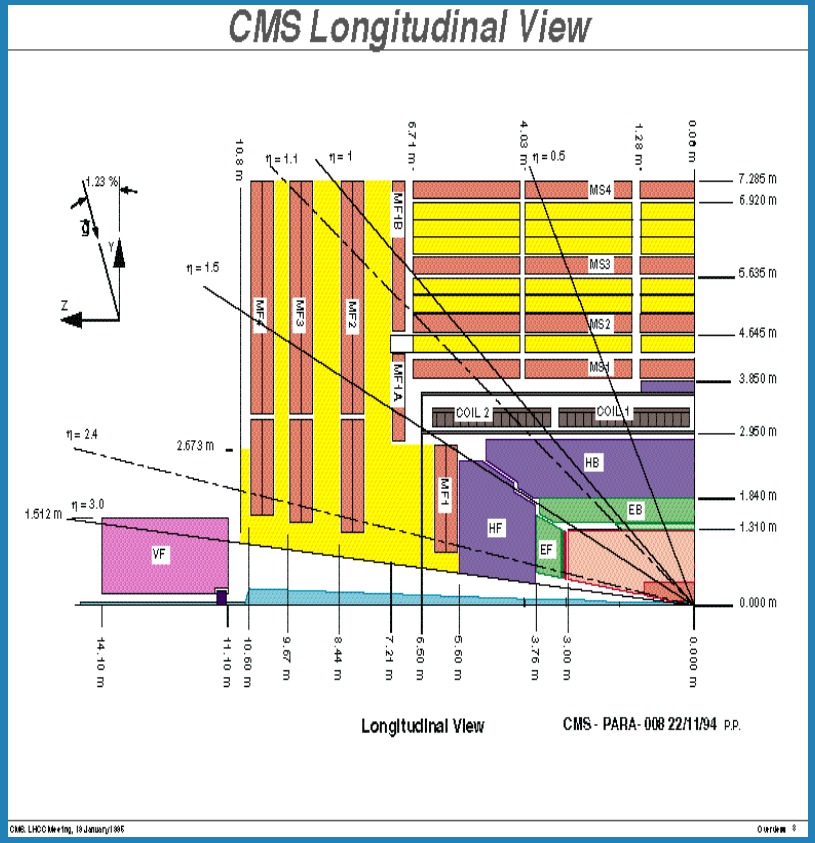

- Rapidity is transformation of polar angle (eta=-ln tan θ/2)
- Equations must consider rapidity region
- Many layers of iron and detectors means field varies

CMSIM simulates detectors

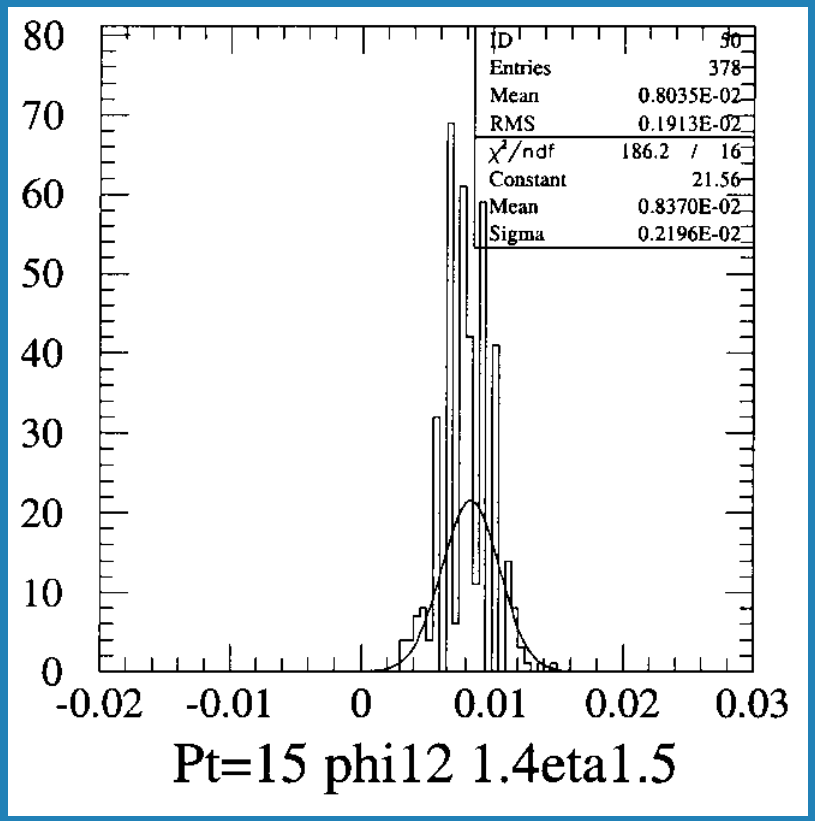

- Mean change in angle at 15 GeV and in the eta region 1.4 to 1.5
- Data is fit to a normal curve
- Provides information of how muons will behave in the experiment

Two station assignment

$$\Delta f = a(h) / Pt$$

- Change in muon track s angle is inversely related to momentum
- This relationship varies depending on the region of the detector

The Three Station Momentum Assignment

Uses change in angle from:

*Station 1 to Station 2

*Station 2 to Station 3

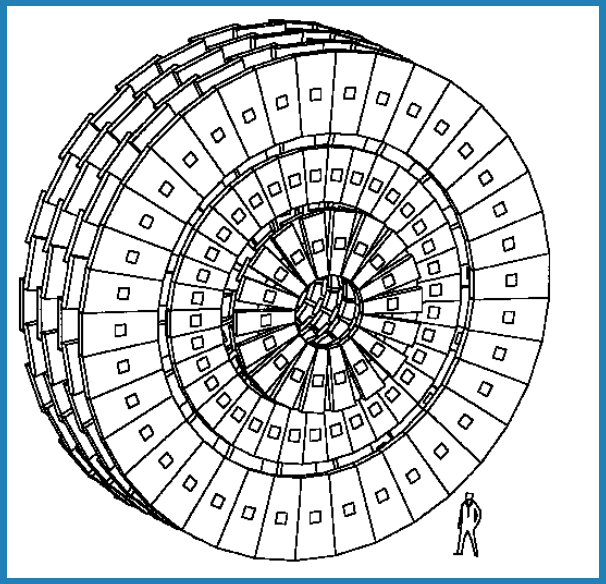

- **Attempts to get a better resolution**
- **Uses more information about muon track**

Likelihood function

- Estimate momentum from measured parameters using method of maximum likelihood
- Correlation between two change in angle values must be considered
- First derivative = 0 maximizes

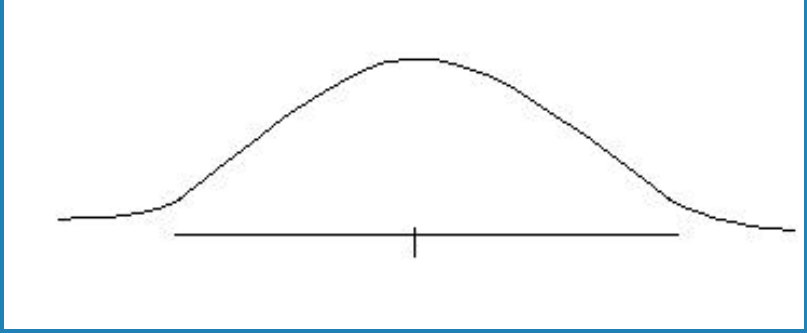

$$\frac{\partial}{\partial Pt} f(\Delta f_{12}, \Delta f_{23}, Pt) = 0$$

Solve for momentum

- Solve the likelihood function for 1/momentum
- The mean and RMS spread parameterized from simulation data
- results in function that depends on rapidity and change in phi angles

$$\frac{1}{pt}=\frac{-\frac{x}{c1^2 a}-\frac{y}{bc2^2}+\frac{px}{ac1c2}+\frac{py}{bc1c2}+\sqrt{\left(\frac{x}{c1^2 a}+\frac{y}{bc2^2}-\frac{px}{ac1c2}-\frac{py}{bc1c2}\right)^2+8(1-p^2)\left(\frac{x^2}{a^2 c1^2}+\frac{y^2}{b^2 c2^2}-2\frac{pxy}{ac1bc2}\right)}}{4-4p^2}$$

Resolution based on 3 station measurement

- Resolution is about 21% for low momentum muons

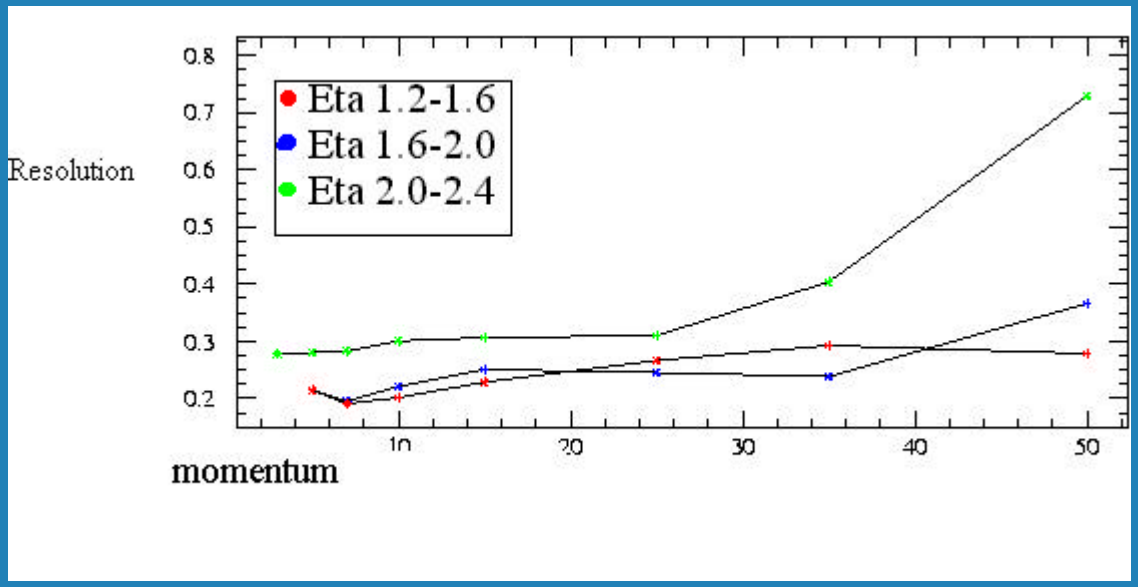

Four Station Momentum Assignment

- Attempts to bring resolution to lowest possible: 15%
- Uses three change in angle values from the four stations
- Not as much bending between third and fourth
- Resolution same as three station assignment

Next Possible Step

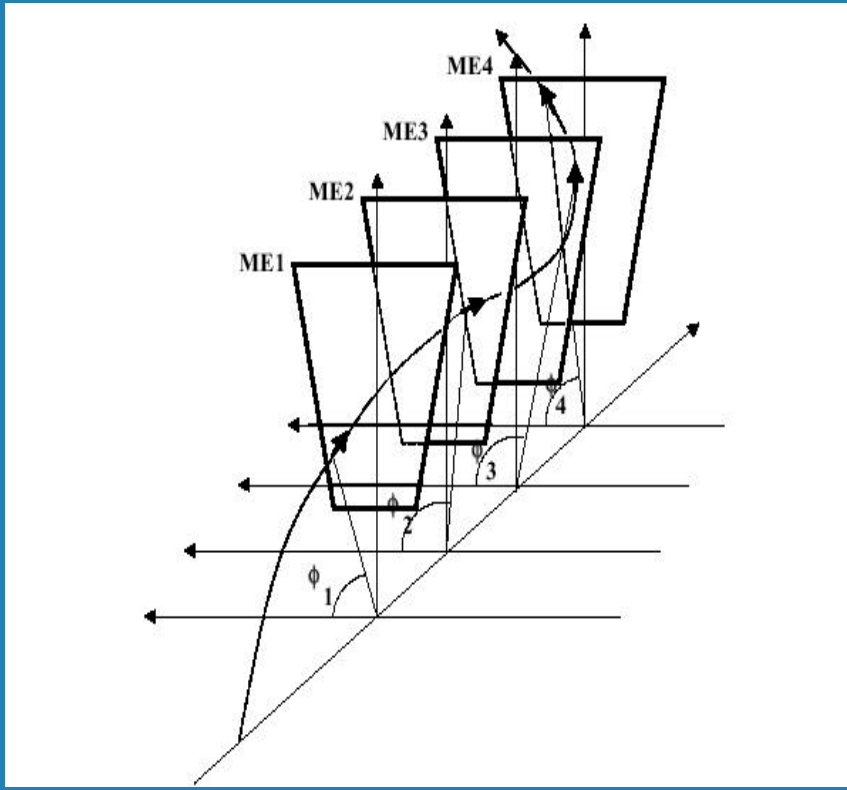

- Each station has 6 CSC chambers
- They assign a direction vector
- The direction can be used in the assignment