Studies in alternative NMR: A simple yet versatile EPR spectrometer

Benjamin P. Tyner

Department of Physics, University of Florida, Gainesville, FL 32611-8440

Abstract

The purpose of this project was to test the feasibility of using a tunnel diode with a microwave cavity for the purpose of inducing and detecting EPR and possibly NMR at microwave frequencies. A control box was constructed to adjust the dc bias of the tunnel diode and to amplify the signal. To test this device for EPR, the microwave cavity was filled with DPPH and then mounted in a large electromagnet with suitable modulation. Initial results are promising, as a strong EPR signal has been observed up to 1.7 GHz. It seems likely that this simple yet versatile circuit could be easily modified to perform NMR at microwave frequencies, assuming a large enough electromagnet is obtainable. This approach should also be suited for low temperature work. Thus the tunnel diode NMR spectrometer may be the first to see NMR at previously inaccessible microwave frequencies.

Acknowledgments

Much gratitude is in order for my mentor, Neil Sullivan, for his guidance, patience, insight, and friendship. Many thanks to Larry Phelps, Marc Link, Larry Frederick, Robert DeSerio, and Steve Martin for their professionalism, helpfulness, and attention to detail. Also thanks to Subrhaman Pilla, Jaha Hamida, Piotr Rozyczko, and Charles Parks for their continuing positive presence and encouragement. Thanks to Kevin Ingersent and Alan Dorsey for their involvement and directing of the REU program, to Darlene Latimer and Dori Faust for overseeing certain bureaucratic matters, and to the National Science Foundation for its funding.

Introduction

Nuclear Magnetic Resonance (NMR) has proven to be a most useful and beneficial tool in recent years. With NMR we can explore the fundamental ordering of molecules in many substances over a wide range of temperatures, determine the composition of a sample, and even obtain images of a living organism's tissues. NMR allows us to perform all these important functions, as well as a host of others, without physically or chemically altering the subject in question. The resulting advances in material science, medicine, chemistry and physics have demonstrated just how powerful and versatile a tool NMR has come to be.

There exists great demand for NMR over a wide range of temperatures, magnetic field strengths, sensitivities, sample volumes, and resonant frequencies. However, one soon finds that the more versatility one wishes to incorporate into a particular NMR spectrometer, the more one is likely to encounter various limitations. For example, traditional circuitry for high frequency NMR fails at extremely low temperatures, and some of the most important NMR research of all is done close to absolute zero! Clearly any NMR spectrometer able to overcome limitations such as these would be of great benefit to researchers in many fields.

The focus of this research was to design and construct an NMR spectrometer using a tunnel diode oscillator capable of operating into the GHz range. To date these microwave frequencies have been inaccessible for NMR because of the high field strengths required. The primary benefits of the tunnel diode approach (in addition to the wide frequency range) are its simplicity, moderate sensitivity, low noise figure,[1] low power consumption, and ability to operate at temperatures near absolute zero. Because their operation is not inhibited by large magnetic fields, tunnel diodes are especially well-suited

for applications in such an environment.[2] These qualities are greatly sought after in NMR spectroscopy, and thus the tunnel diode approach may prove to be a step toward more versatile NMR spectrometers.

Background Theory and Design

The theory behind NMR is simple: in certain atoms, the nucleus has an overall spin, and thus a magnetic moment. This magnetic moment of the nucleus aligns itself with any external magnetic field. If the nucleus has overall spin S, then there exist 2S+1 possible orientations of alignment, all of different and quantized energies. Regardless of the number of distinct energy levels, the energy difference between all adjacent levels is constant for a given nucleus, and is proportional to the external field strength. If a nucleus absorbs a photon of the exact energy difference between two energy levels, the nucleus will be excited to the next highest level. Nuclei can likewise revert to the next lowest level, in the process emitting a photon of this same energy difference. Since a photon's energy and frequency are proportional, only photons of a particular frequency are ever absorbed or emitted for a given nucleus and external field strength. A radio wave applied at this frequency will induce transitions among the energy levels of the nucleus, and will lead to emission of a resonant signal at that same frequency which can then be detected. Every nucleus which exhibits NMR has a characteristic γ, or frequency per field strength, typically a few MHz/T. NMR can also be observed in molecules containing one or more atoms whose nuclei are NMR-active, but γ will be different than for the isolated atom.

A very similar phenomenon occurs with the electrons of an atom known as Electron Paramagnetic Resonance (EPR), in which it is the difference in energies between the two spin states of each electron that is critical. The energy difference between the two electronic states is much larger than that of nuclear particles, so EPR resonance frequencies are typically much higher than NMR resonance

frequencies, of the order of GHz/T. Thus for a spectrometer of a certain frequency, EPR generally requires a lower field strength than NMR. Therefore, when constructing an NMR spectrometer, one typically tests first for EPR, so that its functionality can be gauged without having to obtain a strong electromagnet. The focus of this project was thus to construct an NMR spectrometer for the GHz range, and use EPR to test its functionality. In fact, detecting EPR is the only method currently feasible to test an NMR spectrometer in the microwave range, as the field strengths required for practical NMR at these frequencies are not easily obtained.

A metal cavity can be designed such that it will resonate at a particular frequency. This is because anything metal inherently has capacitance and inductance, and thus will effectively emulate a traditional LC circuit. The capacitance and inductance of a cavity can be calculated from its dimensions or found in a table.[3] Any cavity designed for work in high magnetic fields (such as a cavity for microwave NMR) would need to be non-magnetic (to prevent interference) but still retain a high degree of conductivity, so for our purposes copper is the material of choice.

Tunnel diodes are barely affected by high magnetic fields, and it is even possible to obtain non-magnetic tunnel diodes for working in extremely high fields. By oscillating with a resonant circuit or microwave cavity, the tunnel diode serves as both the source of radio waves to induce NMR or EPR and the detector of the resultant resonance characteristic. A common test substance for EPR is 2,2-diphenyl-1-picrylhydrazyl (DPPH), because it contains a de-localized unpaired electron, yet is still non-magnetic. Thus the circuit we construct simultaneously induces and detects EPR in DPPH at microwave frequencies, and with the addition of a non-magnetic tunnel diode, might even work for NMR. The value of γ for EPR in DPPH is around 24 GHz/T, so we can detect EPR at GHz frequencies with a kG field or less. Thus we employ a microwave cavity to oscillate with our tunnel diode.

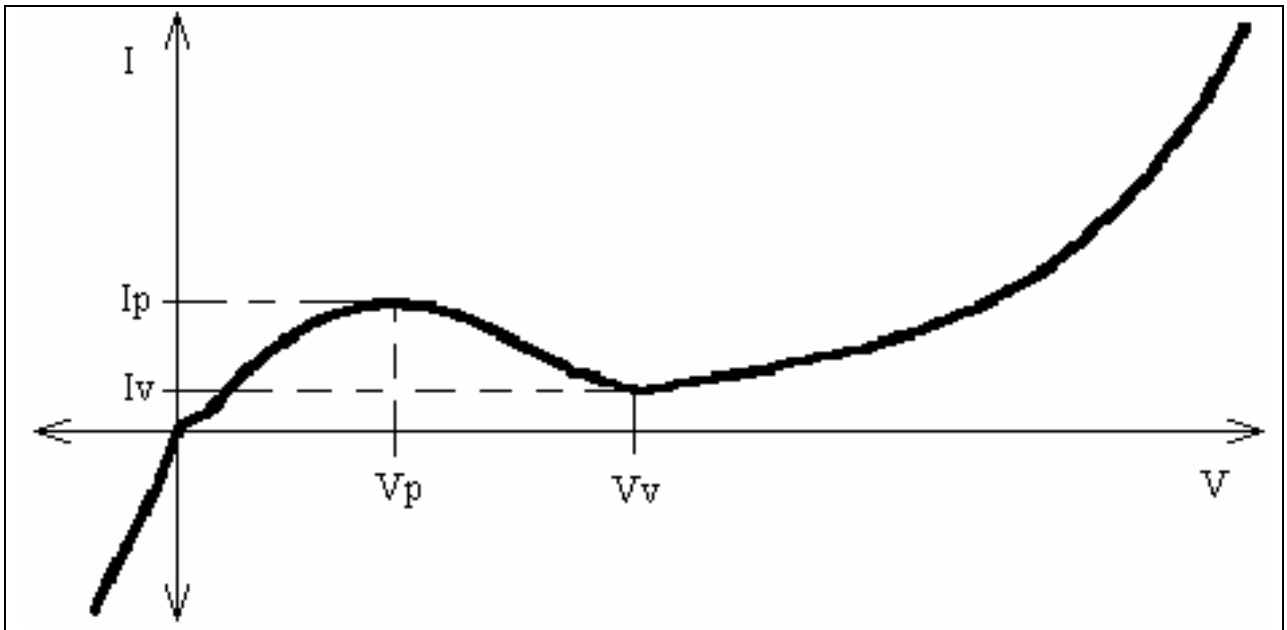

Figure 1: Tunnel Diode IV Characteristic

Tunnel diodes, unlike some other semiconductors, function well at high frequencies.[4] The tunnel diode characteristic we wish to utilize here is its ability to amplify due to its negative differential conductance (leading to ac amplification) under certain dc biasing conditions. A tunnel diode biased in the negative differential conductance region (see fig. 1, dc voltages from V_p to V_v) will amplify any ac signals present.[5]

This amplification allows us to induce radio frequency (RF) oscillation in a resonant LC circuit or microwave oscillations in a cavity while simultaneously detecting and amplifying any EPR signals. The tunnel diodes approach is therefore ideal for inducing and detecting NMR and EPR at high frequencies, and successful microwave EPR with our circuit paves the way for possible microwave NMR, while still preserving the circuit's simplicity and versatility.

Description of Research and Results

The first step was to verify that the use of a tunnel diode oscillator is actually a feasible method for detecting RF signals. To this end, we constructed a resonant LC circuit using a variable capacitor in parallel with a hand-wound inductor (to serve as the pickup coil) and added the BD-5 tunnel diode. A control box was constructed which provided the necessary manipulation of the dc bias for the tunnel diode through a 10 turn helical potentiometer (helipot), and a power supply was obtained for the control box. An oscilloscope coupled to the resonant circuit verified resonance, as oscillations on the order of 100 MHz whose frequency was dependent on the tuning of the variable capacitor were observed. It was also observed that varying the helipot changed the amplitude displayed on the oscilloscope, and further testing revealed that our particular diode's region of maximum negative resistance existed between 0.077 V and 0.250 V. At this stage an inline RF amplifier was used to boost the signal to the oscilloscope. However, very little RF noise was visible on the oscilloscope, meaning that the circuit was lacking in sensitivity.

A simple transistor amplifier was added to the control box, but oscillations from the transistor prevented the tunnel diode from residing in its most sensitive region. To correct this, a 741 Operational Amplifier (OP-AMP) was added to provide feedback to stabilize the tunnel diode's operating point at the most sensitive position on the negative conductance curve (see fig. 1). However, parasitic oscillations were observed (due to the phase shift through the filter capacitors), resulting in the transistor and the OP741 residing in a state of saturation. An OP27 (which is similar to the 741) was also tested, with similarly problematic results. Luckily, by slightly altering the values of the filter capacitors, feedback was eliminated, and the tunnel diode's operating point was stabilized, resulting in satisfactory gain. At

this point two regular silicon diodes were added in reverse polarity parallel across the output to the resonant circuit to protect the tunnel diode from large AC spikes.

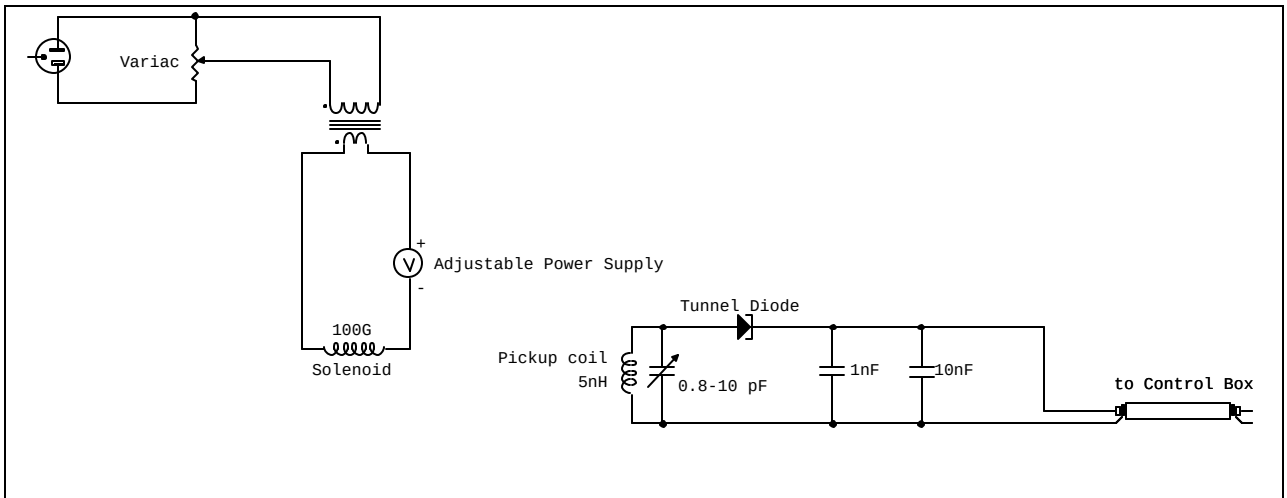

Figure 2: EPR at 100 MHz

A simple circuit for detecting EPR was constructed as displayed in fig 2. This consisted of sealing a sample of 2,2-diphenyl-1-picrylhydrazyl (DPPH) to serve as a source of free unpaired electrons in a small length of tubing placed in the pickup coil of the LC circuit, and then inserting the pickup circuit into a 100G solenoid. The solenoid was connected to a dc power supply in series with a variac-controlled transformer (to provide modulation across the resonance point, and hence a signal); but no EPR signal was initially observed. At this point it was discovered that a much stronger signal (and very faint evidence of EPR) was observable at the output of the transistor, rather than from the 741, which was surprising. It may be that the 741 itself was the source of unwanted noise in the circuit, and thus no observable signal was present at its output. The DPPH sample, having γ of about 24 GHz/T, displayed EPR at a field strength around 40-50 G, which would put the resonance frequency just over 100 MHz. Parasitic oscillations still plagued the tunnel diode's region of steepest negative slope (where it is most sensitive). To confirm the faint EPR signal, a wider sample tube was used, allowing the sample

volume to be increased, and a much larger and definite EPR signal was observed. It was also observed that the higher bias-voltage region of the tunnel diode yielded the better signal-to-noise (S/N) ratio.

The feedback capacitor was increased dramatically to 0.1 μF and the filter network reduced to two 0.0033 μF capacitors, which completely eliminated the parasitic oscillation at all bias voltages, and the EPR signal was still preserved. To boost the signal gain further, the resistance to the transistor was increased significantly, resulting in an appreciable increase in gain, although the transistor was prone to saturation if the resistance was too high. To try and further increase gain, the pickup coil was tapped at its middle and the tunnel diode connected there instead. Unfortunately, in the process the BD-5 tunnel diode was destroyed by excessive heat, and a suitable replacement was not on hand. Thus we were forced instead to temporarily employ a spare BD-6 tunnel diode, which initially seemed to lack the amplification of our original BD-5.

While waiting for a shipment of tunnel diodes more like the BD-5, the BD-6 did not seem well suited for this particular application, as no resonance was observed. It is worth noting at this point that we had not been using "tunnel diodes" in the strictest sense of the word up to this point, but instead "back diodes" (BD), also known as "tunnel rectifiers" which *are actually designed to minimize the effects of the negative resistance region we seek*. The "problem" with the BD-6 was revealed upon reversing its polarity, which actually yielded the strongest noise signal (but not yet EPR) up to this point, with very minimal parasitic oscillations. Apparently it is all too easy to be fooled into connecting a "back diode" such as this backwards, as the meaning of "cathode" and "anode" becomes ambiguous when describing current flow through these devices. Regardless, the correct orientation for our circuit was the metal case lead of the diode going to the bias control box, and the insulated lead going to the resonant circuit. The cutoff voltage for this BD-6 diode was around 0.122 V.

The original plan to tap the pickup coil was successfully carried out, although it was questionable whether or not this really boosted the gain, so the tap was removed and the original configuration restored. The 741 was destroyed during an attempt to manually induce oscillation using a capacitor; so it was replaced by an essentially identical OP07. In the hopes of cutting down stray noise from excessive impedance, the pickup circuit was streamlined with less unnecessary wiring, however the pickup circuit still resonated inconsistently. A piece of copper was mounted on the pickup board so that the variable capacitor could be more firmly mounted with solder; this allowed its adjustment without its connections being strained by excessive torque.

A simple Field Effect Transistor (FET) amplifier circuit was added to the control box, however gain was not improved, and parasitic oscillations were once again induced near the diode's cutoff point. However, investigations into the pin configuration of our FET 2N5669 revealed the problem: its middle pin had been assumed to be the gate, which is false, and properly reconnecting the FET yielded satisfactory gain (at least double that of before). However, still no trace of EPR was visible using the BD-6.

Placing one of the newly arrived diodes in the resonant pickup circuit (with "cathode" toward the control box) yielded results much like that of the BD-6. However, reversing its polarity to have the "cathode" toward the resonant circuit yielded the best EPR signal we had observed so far. Thus it was anticipated that the new diodes would be well-suited for the resonant cavity to detect EPR in the GHz range.

Once the microwave cavity was constructed, chip capacitors were soldered to it, and a loop of wire was inserted and connected with solder as well. Safely enclosing the DPPH while maximizing sample volume was problematic. The first idea was to seal the DPPH in a small plastic bag with scotch

tape. Although the bag fit snugly in the cavity, it was prone to leakage. The Plexiglas screwdriver slot was attached with glue, and it was remolded to allow usage of the larger tipped non-conducting screwdriver. The whole assembly was initially cleaned with ethyl alcohol and cotton, but steel wool was found to be a vast improvement for this purpose. Other methods of enclosing the DPPH were tested, including latex sealed (poorly) by heat. Another method we attempted was to place DPPH between two pieces of cigarette-rolling paper sealed with varnish and then tightly wind this around a Teflon tube. Once the varnish set the whole unit was quite strong, as the Teflon kept the varnish from sticking to the copper once it was enclosed in the cavity. Finally, the tunnel diode was added to the resonant cavity (see fig. 5) which completed the circuit, and the whole unit was mounted on a rod of Plexiglas with a coaxial cable to connect the cavity to the control box.

The values of the filter network capacitors were slightly adjusted a final time, and the FET amplifier was streamlined a bit. Thus all components were prepared for use with a much larger electromagnet (on the order of several kG), and training was received for the proper operation of its power supply and cooling system. After some fine-tuning, attempts to detect EPR using the 100 MHz resonant circuit (placed in the large electromagnet) were successful, and it was observed that much more modulation was necessary than before (we used the original variac and transformer connected to the electromagnet's modulation coils). It was necessary to "trigger" the oscilloscope from the AC modulation directly, in order to observe only the part of the signal containing the modulation. In addition, the signal at this frequency was noticeably reduced from results observed with the solenoid, which might have been due to interference from the electromagnet's large mass of iron. It was predicted that these effects would be negligible with the tuned cavity, because the EPR signal strength would hopefully increase with frequency.

At this point the microwave cavity was mounted in the large electromagnet, but was not detected at first. Many modifications had to be made to this setup before EPR was finally detected. These include increasing the area of the wire pickup loop inside the cavity, reorienting the cavity itself so that the field would be parallel to the resonance (this involved substantially shortening the mounting end of the cavity with a hacksaw), finding a method to enclose a larger volume of DPPH sample, and decreasing the diameter of the wire used for the pickup loop. The next design employed to enclose the DPPH was an inner wall of Teflon tubing and an outer wall of shrink-wrap, but the shrink-wrap did not seal tightly enough to prevent the two from slipping and the DPPH leaking out. A first attempt to observe EPR by essentially filling the cavity entirely with DPPH was unsuccessful.

Through all these modifications the mechanical and thermal stresses of soldering were evident on the various components of the cavity. Its screw threads lost some of their form, and repeated insertion and removal of the inner piece eventually caused the threads to be fully “stripped”. The heat also took its toll on the chip-mount capacitors, so they were replaced with new ones. Pickup loops of a variety of diameters were tested, as more area was possible with smaller wire but the smaller wire was also prone to bending and/or breaking. In addition, the new diodes were no more resistant to heat than the originals, and soldering destroyed a few.

EPR was finally detected following a few more modifications. A fresh tunnel diode, a previously untried size of wire for the pickup loop, and filling the whole cavity with DPPH and sealing it with black wax resulted in the observation of a definite EPR signal between 430 and 442 Gauss, which would put the frequency of resonance around 1.05 GHz. The signal was quite strong (10-20 mV), and was both modulation dependent and field strength dependent. The amplifier's bandwidth (range of operable signal frequencies) was calculated to be roughly 25kHz.

A signal around 1.6 GHz (see fig. 3) was later detected after tuning the cavity to a smaller volume, although this reduced the volume of DPPH, and the signal was slightly reduced. It is debatable which modification was the deciding factor in our eventual success in finding EPR, but it seems likely that the mid-range size of wire for the pickup loop was a significant improvement, as it allowed a larger loop area while still maintaining the strength and stability of the large-diameter wire. It is likely that the loop of smaller wire was prone to losing its insulating varnish and thus short-circuiting with the cavity's case. It is also likely that filling the cavity with sample increased the signal strength considerably, although this had already been tried once before, albeit not with the same diameter of wire for the loop.

The apparatus was also tested at lower temperatures using a bath of liquid nitrogen, which resulted in an approximately twofold increase in the signal strength.

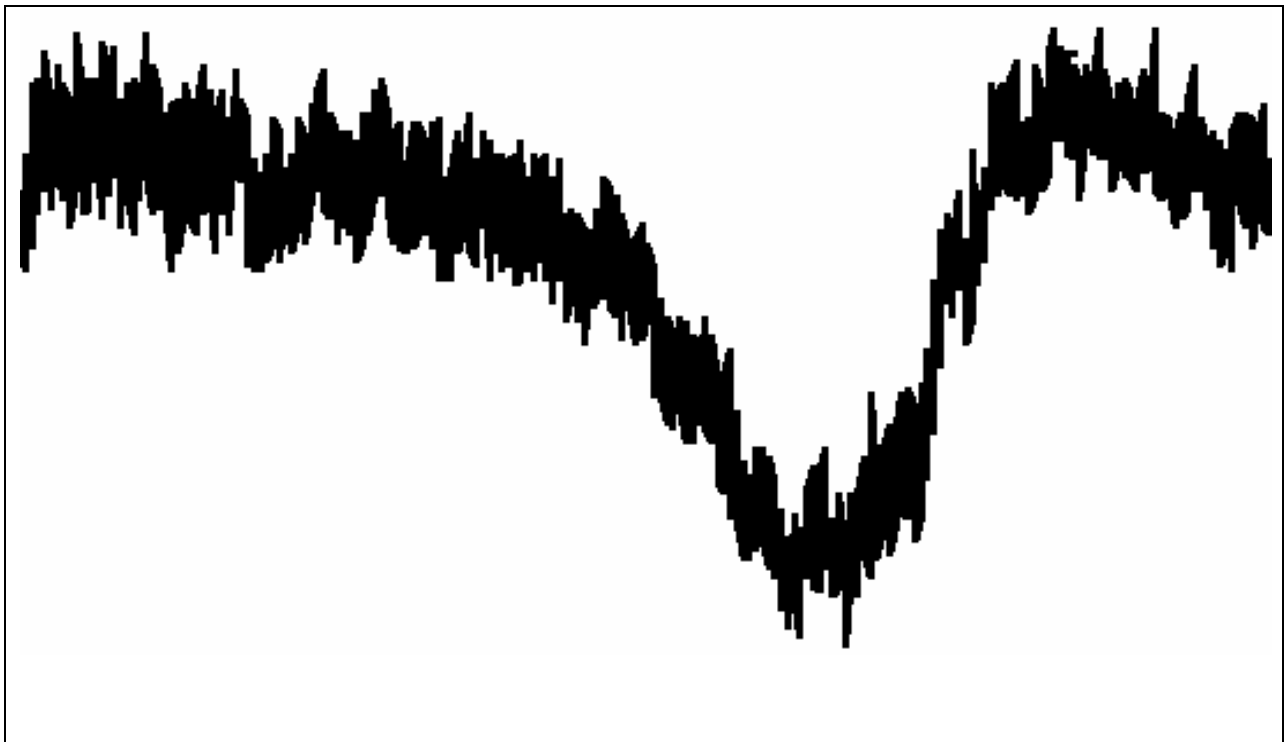

Figure 3: EPR signal of DPPH at 1.6 GHz

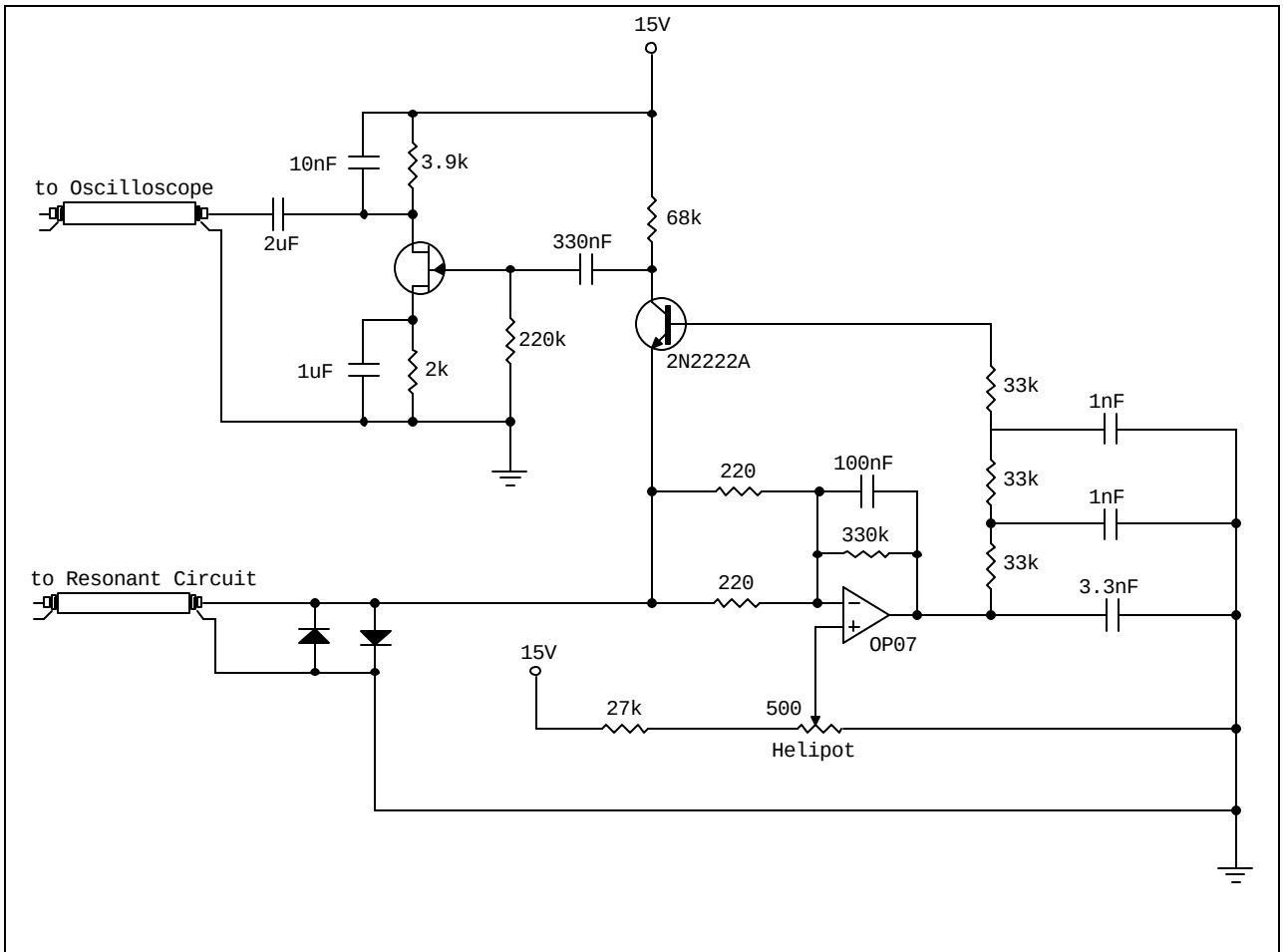

Figure 4: Control Box Schematic

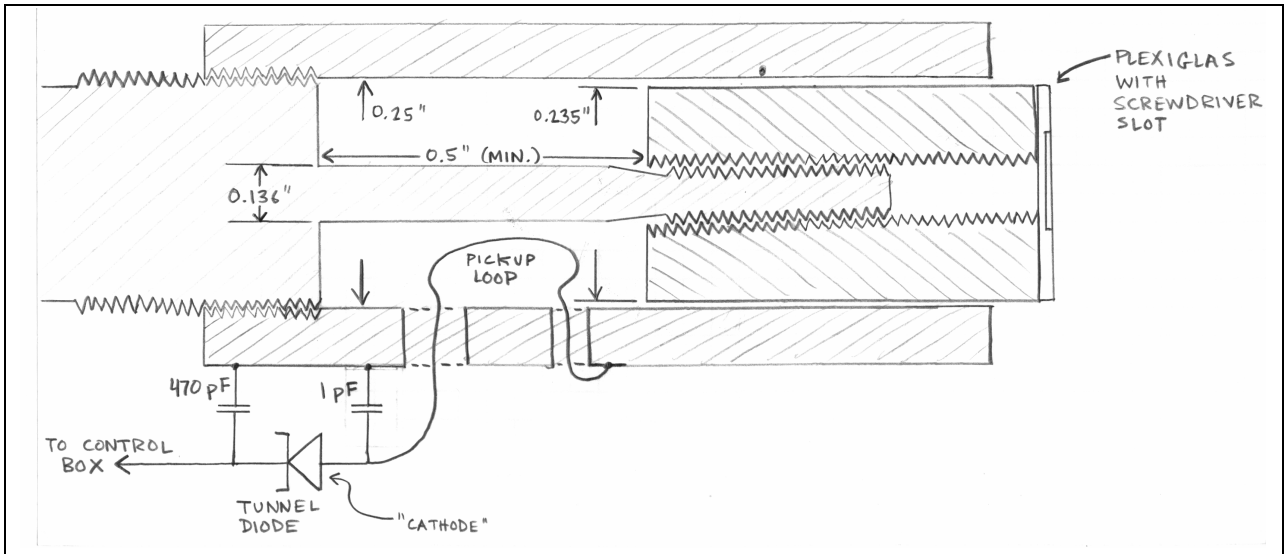

Figure 5: Microwave Cavity and Circuitry

Conclusions

It was quite exciting to see the EPR spectrum of DPPH detected, especially at microwave frequencies, especially considering the relative simplicity and elegance of our circuit design. It seems reasonable, that by simply switching to a non-magnetic tunnel diode, this method would work for NMR spectroscopy at frequencies currently untested, the limiting factor being of course the maximum field strength of current electromagnets. Improved sensitivity might be achieved by plating the cavity with gold, which is a better conductor than copper. It is unfortunate that the small size of the cavity makes the kind of precision adjustments necessary for work in high fields all the more difficult.

Though the project never progressed far enough to be testable for NMR, we feel that the obstacles to overcome are logistical, not physical. This method holds promise for environments previously only accessible with more costly techniques, such as very low temperatures, as well as with radioactive samples (tunnel diodes are among the semiconductors most resistant to radioactivity).[6] The simplicity and versatility of this approach to NMR make it truly unique.

References

[1]C. S. Kim, in *Electronics Engineers' Handbook*, 2nd ed., edited by Donald G. Fink and Donald Christiansen (McGraw-Hill Book Company, 1982), p.13-60

[2]Craig T. Van Degrit, Rev. Sci. Instrum. (1975), p.599

[3]The Microwave Journal (Horizon House, Inc., Mass., Jan. 1967), pp.54-56, p.62

[4]F. N. H. Robinson, British Journal of Physics E: Scientific Instruments (1977 Vol. 10), p.254-258.

[5]Aldert van der Ziel, *Electronics*, Allyn and Bacon Series in Electrical Engineering (Allyn and Bacon, Inc., Boston, 1966), p.68

[6]John E. Traister and Robert J. Traister, *Encyclopedic Dictionary of Electronic Terms*, (Prentice-Hall, Inc., NJ, 1984), pp. 579-582.