Proximity detector circuits: An alternative to tunnel diode oscillators for contactless measurements in pulsed magnetic field environments

M. M. Altarawneh,[1,2] C. H. Mielke,[1] and J. S. Brooks[2]
[1]*MPA-NHMFL, Los Alamos National Laboratory, Los Alamos, New Mexico 87545, USA*
[2]*Department of Physics and National High Magnetic Field Laboratory, Florida State University, Tallahassee, Florida 32310, USA*

(Received 4 February 2009; accepted 14 May 2009; published online 30 June 2009)

A radio frequency oscillator circuit based on a proximity detector integrated circuit is described as an alternative for the traditional tunnel diode oscillator used for pulsed magnetic field measurements at low temperatures. The proximity detector circuit design, although less sensitive than tunnel diode oscillator circuits, has a number of essential advantages for measurements in the extreme environments of pulsed magnetic fields. These include the insensitivity of operation to voltages induced in the inductor coil, the elimination of a diode bias circuit and tuning, and a broad dynamic range of resonant frequency variation. The circuit has been successfully applied to measure the superconducting upper critical field in $Ba_{0.55}K_{0.45}Fe_2As_2$ single crystals up to 60 T. © *2009 American Institute of Physics.* [DOI: 10.1063/1.3152219]

Radio frequency (rf) contactless measurements are useful to study a wide range of physical properties in materials. In metals, skin depth and sheet resistance are accessible, in superconductors upper critical fields and penetration depths can be determined, and in magnetic materials dynamical susceptibility and magnetic transitions can be measured. Advantages of rf measurements include the high sensitivity (due to high Q, high stability oscillator circuits) and the contactless nature of the measurement. The latter is important for samples that are very small, or have poor contact surfaces, or are air sensitive, or cannot be handled for other reasons, including radioactivity. A mainstay of rf methods in condensed matter has been the tunnel diode oscillator (TDO) since 1975.[1] The TDO is an rf tank circuit oscillator where the losses in the LC circuit are compensated by biasing the tunnel diode in the negative resistance region ($R_n=(dI/dV)^{-1}$) of its I-V characteristic. As shown in Fig. 1.

TDO circuits, with the sample placed in the inductor, have been successfully used to measure superconducting transitions[2] and the Shubnikov–de Haas effect (oscillations in resistivity) as a function of magnetic field in organic conductors in dc field[3] and in pulsed fields.[4] More recently quantum oscillations have been observed using TDO methods in $SrFe_2As_2$ (Ref. 5) and in $YBa_2Cu_4O_8$.[6] Magnetic transitions in ferromagnetic and antiferromagnetic materials and changes in spin order also have been studied using TDO circuits due to the sensitivity to magnetic transitions.[7]

The TDO stability which can approach $1:10^8$ is perhaps its main advantage. However, in our experience, the narrow range of operating parameters for TDO stability (see Fig. 1) can be a limiting factor where large temperature changes, rapidly changing magnetic fields, or large variations in sample size or signal are present. Due to the very low operating power of the TDO, the entire circuit is generally placed near the sample coil, and therefore generally in a region of low temperature and high magnetic fields. In cryogenic applications often the optimum parameters allow the TDO to operate only at low temperatures due to the temperature dependent parameters of the TDO characteristics and its circuit components (mainly the tank circuit impedance Z and minimum differential negative resistance R_n). In particular, the impedance of the tank circuit—which is increased as cooling the TDO circuit down—should be equal or slightly larger than the absolute value of the series combination of R_n and R_p (parasitic resistance), in other words, $Z \geq |R_p+R_n|$.[8] This is particularly acute for applications where small measurement coils are required to increase the filling factor for very small samples ($r \sim 100$ μm). Likewise, when a sample is changed, it is often necessary to use a different coil to match the sample geometries and therefore the other parameters need to change as well to stabilize the TDO. In pulsed magnetic fields large induced emf ($V_{\text{induced}} \sim 60$ mV for 1 mm^2 area) can arise due to uncompensated circuit loops, causing changes in the resonant frequency or driving the TDO out of the stable operating bias condition (Induced emf can be reduced[4] by exploiting geometry and compensating coil methods). Other drawbacks of the TDO technique include the few number of vendors of tunnel diodes, and the tendency for failure due to heating during soldering, electrostatic shock, etc. during assembly.

In this short report we describe the design and demonstration of a robust alternative to the TDO, the proximity detector oscillator (or PDO).[9] The PDO circuit avoids several of the complications of the TDO circuit, while providing good sensitivity to changes in materials properties in pulsed magnetic fields.

In a resonant LC tank circuit where $f=1/2\pi\sqrt{LC}$, a sample (insulated electrically from the tank circuit components) can be inserted into either the inductor or the capacitor. The capacitor mode is generally used for dielectric studies,[10] but herein we will focus on inductive sample properties. Changes in skin depth (electrical conductivity) and/or magnetic moment (magnetic permeability) will alter the inductance of a material in the inductor coil, thereby producing a shift in the resonance frequency, which can be expressed as

 © 2009 American Institute of Physics

Downloaded 25 May 2011 to 128.227.27.199. Redistribution subject to AIP license or copyright; see http://rsi.aip.org/about/rights_and_permissions

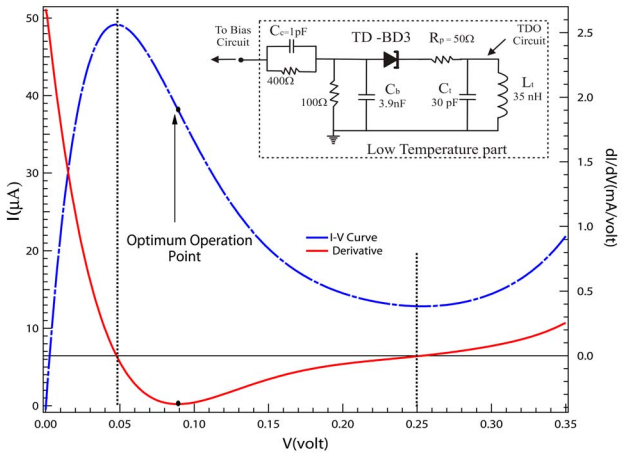

FIG. 1. (Color online) A BD-5 tunnel diode (manufactured by GPD Optoelectronics Corp.) *I-V* characteristic curve. The vertical dashed lines indicate the possible minimum and maxim operating bias voltage with $\Delta V=0.2$ V. The inset shows a schematic diagram of the TDO circuit at low temperature[8] where the parameters shown are typical for a BD-3 tunnel diode (manufactured by Aeroflex-Metelics Corp.) operating at 150 MHz.

$$\frac{\Delta f}{f_0} = -\frac{\Delta L}{2L}. \tag{1}$$

In practice, all physical parameters of a sample (including dielectric and dissipative effects) will contribute to the shift in frequency, and in many cases the interpretation of Δf can be difficult to interpret beyond the demarcation of a phase transition. (More in-depth treatments of rf measurements are presented in Refs. 2, 4, 8, and 11.)

In superconductors, diamagnetic shielding due to supercurrents is responsible for changing the inductance and frequency of the circuit. These effects are related to the penetration depth of the rf field into the superconductor, and the change in the penetration depth for a cylindrical shaped sample is proportional the change in frequency, expressed as[12]

$$\Delta\lambda = \frac{R^2}{r_s}\frac{\Delta f}{f_0}, \tag{2}$$

where $\Delta\lambda$ is the change in penetration depth, R is the coil radius, and r_s is the sample radius.

Hence by changing either the magnetic field or the temperature, the rf circuit will respond significantly upon passing through a superconducting transition in a bulk crystal[13] as long as the filling factor $(V_{\text{sample}}/V_{\text{coil}})$ is of the order of 0.5–1. In low temperature measurements, the pulsed magnetic field experimental environment generally involves a liquid helium cryostat and sample probe to position the sample inside the sensor inductor coil (hereafter L_0) at the center of a pulsed field magnet, where the distance from the sample to the probe top (at room temperature) is typically ~1 m. For an oscillator circuit placed at the top of the probe at room temperature (as is the case for the PDO described below and in Fig. 2), the inductance of the coax connecting the oscillator circuit to the L_0 sensor coil will be part of the tank circuit. The rf output of the oscillatory circuit is typically downconverted from frequencies in the range of 10–50 MHz to an intermediate frequency (IF) and the difference frequency is extracted by using a low pass filter at ~2.5 MHz. The IF carrier is recorded with a digitizing oscilloscope over the entire duration of the magnetic pulse. A simple peak-finding algorithm or discrete Fourier transformation is then run on the raw data to calculate the frequency shift Δf (which is generally of order in kilohertz) as a function of time. The time dependent frequency is then correlated with the applied magnetic field yielding the frequency shift versus magnetic field data (see Fig. 3).

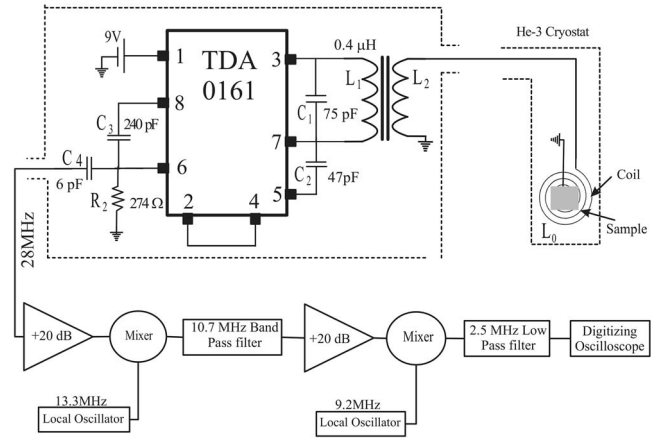

FIG. 2. A schematic diagram of the PDO circuit connected between the measurement coil and the rf signal processing stage. The coupling inductor L_2 and signal inductor L_0 are around 0.2 and 0.017 μH, respectively. The contribution from the connecting coax is estimated to be 0.28 μH and C =92 pF. This circuit operates at 28 MHz.

The PDO circuit in Fig. 2 is based on a commercially available integrated circuit (IC) component (TDA0161) (Ref. 9) normally used for metal detectors. The IC works in a manner similar to the tunnel diode in that the effective resistance between pins 3 and 7 is negative, thereby compensating for losses in the effective *LC* tank circuit between the same pins. The TDA0161 compares the reference resistance between pins 2 and 4 (R_{2-4}) with the effective tank circuit loss R_p, and when the *LC* circuit is exposed to an external inductive load (e.g., metal object) the change in R_p with respect to (R_{2-4}) induces additional current into pin 1 and this

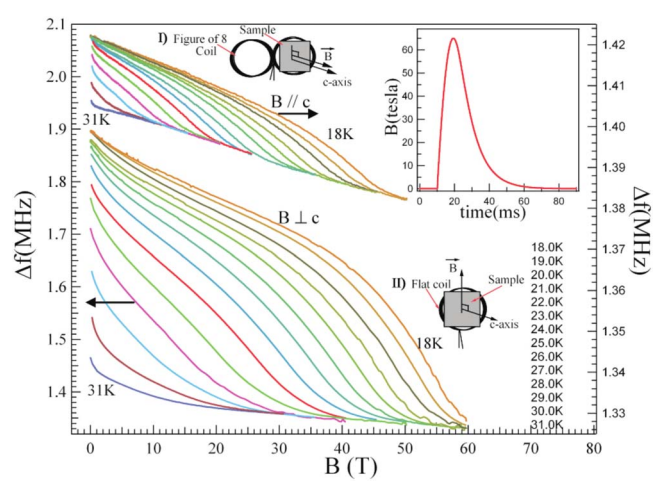

FIG. 3. (Color online) Critical magnetic field behavior of a single crystal of the anisotropic superconductor $Ba_{0.55}K_{0.45}Fe_2As_2$ at different temperatures from 18 to 31 K. Left axis: frequency shift as a function of magnetic field applied along the crystallographic *c*-axis for configuration **I**. Right axis:frequency shift as a function of magnetic field applied perpendicular to the crystallographic *c*-axis for configuration **II**). The inset shows the pulsed field profile as a function of time.

Downloaded 25 May 2011 to 128.227.27.199. Redistribution subject to AIP license or copyright; see http://rsi.aip.org/about/rights_and_permissions

is translated to a metal detector readout. For R_p less than R_{2-4} the circuit will not oscillate. We have modified the IC circuit in the following ways.

(1) We have set $R_{2-4}=0$ with a short so that R_p is always greater than R_{2-4} and the IC will always oscillate.
(2) A resistor R_2 was added to maintain a stable operating voltage.
(3) The IC operating frequency is available on pin 6 and is read out across the coupling capacitor C_4.
(4) The inductor L_1 in the commercial unit [external to the Dual In-line Package (DIP)], is coupled to a secondary coil (L_2) wound around L_1 (air coupled). L_2 is connected in series by coaxial cable to the measurement coil (L_0). The resonance frequency of the PDO depends on the effective inductance of (L_0), (L_1), (L_2) and the connecting coax [effective inductance is given by Eq. (3),[14]], which must be within the operating range of the PDO. The total effective inductance can be changed by varying the coupling factor (M). The PDO is optimized to produce a resonance frequency around 10 MHz, but we have successfully operated it up to 28 MHz which make it useful when studying very small samples.

$$L_{\text{eff}} = L_1\left[1 - \frac{M^2}{L_1(L_2 + L_0 + L_{\text{coax}})}\right]. \quad (3)$$

The PDO circuit was mounted on a printed circuit board inside a metal box for isolation and Sub-Miniature version A (SMA) connectors were used for the probe coax and output frequency connections. To compensate for the induced emf in the pulsed field, the design of the sample inductor L_0 involved identical, but oppositely wound coils connected to cancel induced voltages, which is most severe when the field is parallel to the measurement coil axis. (The sample is placed in one of the two coils in a pair see inset I, Fig. 3).

The PDO resonance frequency was stable with a phase noise of less than 50 Hz over ~2 h. The amplitude of the rf oscillations when measured at capacitor C_4 was 100mV.

The PDO setup was used to study the superconducting state in $Ba_{0.55}K_{0.45}Fe_2As_2$ single crystals and to determine the upper critical field H_{c2} up to 60 T at 4.2 K.[15] From Eq. (3), when a sample (near or in a measurement coil) enters the superconducting state, the diamagnetic shielding of the sample decreases the inductance of the measurement coil (L_0) and the effective inductance between pins 3 and 7 causing the resonance frequency to increase. A single crystal of ($0.55\times0.55\times0.014$ mm^3) was measured in two orthogonal sample orientations: with the applied field normal to the conducting planes (parallel to the crystallographic c-axis) and with the applied field parallel to the conducting planes (perpendicular to the crystallographic *c-axis*. The alignment accuracy in this experiment was within approximately 2°. In the first orientation ($B\|c$-axis), the sample was placed on the top of the measurement coil which has a resonance frequency of 28 MHz. In this orientation, a figure-8 coil (0.7 mm diameter each) was needed to cancel out induced voltages that are generated during the field pulse due to the large uncompensated area when a single coil is used (see configuration **I** in Fig. 3). In the second orientation ($B\perp c$-axis), the sample was placed on the top of a single flat coil (0.8 mm diameter with five to eight turns and 28 MHz resonance frequency) laying flat in a plane that is parallel to the pulsed magnetic field, leading to a very small uncompensated area (see configuration **II**, Fig. 3). In both configurations (with different effective filling factors) an increase in the PDO resonance frequency indicated the onset of the superconducting transition, and hence the anisotropic critical fields versus temperature could be obtained.[15]

In summary, the advantages of the PDO include: (1) the wide range of coil inductance, sample size and shape, temperature range (room to helium temperatures), and operating supply voltage over which the detector will function without adjustment; (2) the insensitivity to induced voltages in the tank circuit and the elimination of the necessity for bias tuning; (3) the commercial availability and robust nature of the PDO package during circuit assembly. We have demonstrated the use of the PDO in a 60 T pulsed magnet to measure the anisotropic superconducting critical field of single crystals of $Ba_{0.55}K_{0.45}Fe_2As_2$ for two different sample directions requiring two different inductor coil geometries.

Work at Los Alamos National Laboratory (LANL) was supported by NSF-DMR-0654118, DOE, and the State of Florida. M. M. Altarawneh is supported in part by NSF-DMR 0602859 (FSU) and LANL LDRD-DR20070013. LANL is operated by LANS LLC. We thank N. Ni, S. L. Bud'ko, and P. C. Canfield for providing the $Ba_{0.55}K_{0.45}Fe_2As_2$ sample.

[1] C. T. Van Degrift, Rev. Sci. Instrum. **45**, 1171 (1974).
[2] A. Carrington, I. J. Bonalde, R. Prozorov, R. W. Giannetta, A. M. Kini, J. Schlueter, H. H. Wang, U. Geiser, and J. M. Williams, Phys. Rev. Lett. **83**, 4172 (1999).
[3] G. J. Athas, J. S. Brooks, S. J. Klepper, S. Uji, and M. Tokumoto, Rev. Sci. Instrum. **64**, 3248 (1993).
[4] T. Coffey, Z. Bayindir, J. F. DeCarolis, M. Bennet, G. Esper, and C. C. Agosta, Rev. Sci. Instrum. **71**, 4600 (2000).
[5] S. E. Sebastian, J. Gillett, N. Harrison, P. H. C. Lau, D. J. Singh, C. H. Meilke, and G. G. Lonzarich, J. Phys.: Condens. Matter **20**, 422203 (2008).
[6] E. A. Yelland, J. Singleton, C. H. Mielke, N. Harrison, F. F. Balakirev, B. Dabrowski, and J. R. Cooper, Phys. Rev. Lett. **100**, 047003 (2008).
[7] M. D. Vannette, A. S. Sefat, S. Jia, S. A. Law, G. Lapertot, S. L. Bud'ko, P. C. Canfield, J. Schmalian, and R. Prozorov, J. Magn. Magn. Mater. **320**, 354 (2008).
[8] C. T. Van Degrift, Rev. Sci. Instrum. **46**, 599 (1975).
[9] ST Microelectronics, http://www.st.com.
[10] F. M. Ellis, R. B. Hallock, and J. S. Brooks, Rev. Sci. Instrum. **52**, 1051 (1981).
[11] C. H. Mielke, J. Singleton, M. Nam, N. Harrison, C. C. Agosta, B. Fravel, and L. K. Montgomery, J. Phys.: Condens. Matter **13**, 8325 (2001).
[12] C. H. Mielke, Ph.D. thesis, Clark University, 1996.
[13] E. S. Choi, E. Jobilong, A. Wade, E. Goetz, J. S. Brooks, J. Yamada and M. Tokumoto, Phys. Rev. B **67**, 174511 (2003).
[14] L. Cohen, *Formulae and Tables for the Calculation of Alternating Current Problems* (McGraw-Hill, New York, 1913).
[15] M. M. Altarawneh, K. Collar, C. H. Mielke, N. Ni, S. L. Bud'ko, and P. C. Canfield, Phys. Rev. B **78**, 220505 (2008).

Downloaded 25 May 2011 to 128.227.27.199. Redistribution subject to AIP license or copyright; see http://rsi.aip.org/about/rights_and_permissions