Apparatus

Home

Theory

Apparatus

Results

Apparatus:

A. Biasing Circuit

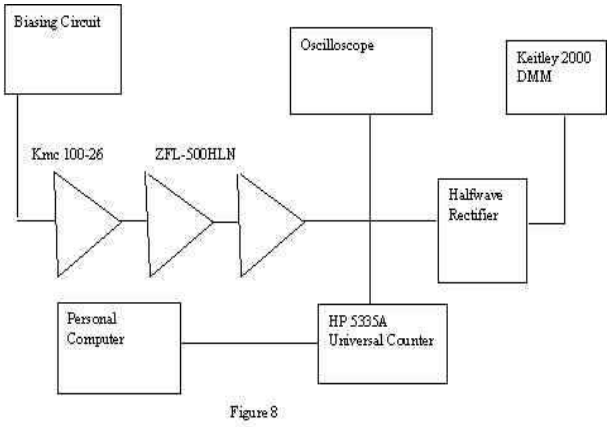

Figure 3 - Biasing Circuit

In order to measure the magnetic susceptibility of our materials we used a tunnel diode oscillator circuit. A schematic of this circuit is shown in figure 4. The power for this circuit is provided by a room temperature biasing circuit (Figure 3). This circuit consists of a 3 volt Panasonic lithium battery model BR -2/3 AG 3V, which provides the necessary voltage to bias the tunnel diode. This type of battery was chosen because it is a very steady current source. The resistance values R_{fixed} = 25KOhm and $R_{variable}$ = 10KOhms were chosen so that it would be impossible to inadvertently drive more than 120 uA through our tunnel diode circuit. The resistors are used in conjunction with the resistors in the TDO circuit to bias the Tunnel diode to its inflection point at 118 mV 26 uA. Because our ac signal will be transmitted on the same coaxial cable that is providing the bias voltage for the Tunnel Diode; we will pass the signal through a high pass filter consisting of a capacitor of capacitance 110pF with a 3dB point of ~50 kHz before passing the signal to our amplification and data acquisition instruments.

B. TDO Circuit

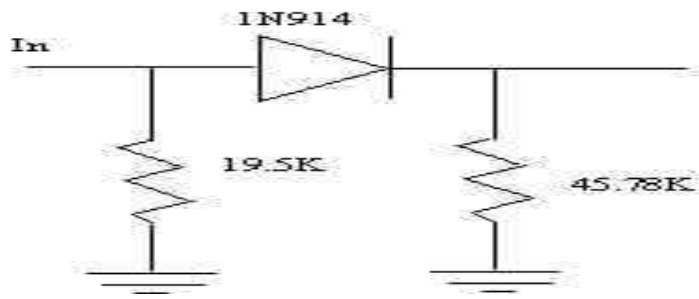

Figure 4 - TDO Circuit

A schematic of the tunnel diode oscillator circuit is shown in figure 4. The biasing voltage and the output signal both travel along a coax cable to the TDO circuit. However since the coax cable has a capacitance it is necessary to isolate the TDO circuit from it. This is accomplished by placing a small resistor R_1 = 100 Ohm at the input of the TDO circuit. In order to bias the Tunnel Diode the resistor R_2 = 2KOhm is used in conjunction with the resistors in the biasing circuit to create a voltage divider to properly bias the tunnel diode to the inflection point. Furthermore the capacitor C_B acts as a low pass filter further isolating the circuit from any external noise, and will also allow the ac oscillations from our LC circuit exit the circuit, we used a 110pF capacitor for C_B with a 3db point at 723 kHz. The Tunnel Diode acts as a negative ac resistance, which will cancel out the losses of the tuned circuit. The inductor L was a hand wound coil. The sample was placed within the core of the coil. The capacitor C was used to make the tank circuit. The values of L and C were chosen so that resonant frequency of the LC circuit was in the 30MHz range. All capacitors used were silver mica types, and all resistors were metal film resistors.

In order to achieve this frequency we know that the frequency of an LC circuit is given by

$$f_0 = \omega_0 / 2\pi \quad (6)$$

We also know that w_0 for a LC Circuit is

$$\omega_0 = \frac{1}{(LC)^{1/2}} \quad (7)$$

And we know that the inductance of coil will be given by

$$L = \frac{\mu_0 N^2 A}{l} \quad (8)$$

where μ_0 is the susceptibility of free space, N is the number of windings, A is the area of the inductor, and l is the length of the inductor. We used an inductor with inductance of 0.968uH. This was constructed by winding 20 turns of insulated copper wire around a 1/8 inch (0.3302 cm) diameter Delrin core, with a length of 0.5375 cm. The Delrin core was then drilled out to provide a hole in which to place our samples. Therefore our inductor enclosed a volume of 0.043±0.001 cm^3. In order to obtain an operating frequency of 30 MHz a 30pF capacitor was used.

However this circuit must be considered as a LRC circuit because of the inherent resistance of the wire used in the coil. Therefore the damping factor will be given by

$$\gamma = \frac{R}{2L} \quad (9)$$ [7]

Srikanth et al. have shown that for circuits with y << w the output will have a well defined sinusoidal form. Therefore, if the resistance of the inductor is less than 1 Ohm the y factor will be much less than w. In order to have stable oscillations it is necessary to have a high quality factor Q where Q is given by

$$Q = \frac{\omega L}{R} \quad (10)$$

Therefore with an operating frequency of 30MHz, we were able to both attain a high quality factor, and have well defined sinusoidal output.

In order to reduce noise in our circuit we placed in a metal box for our high temperature measurements.

C. Low Temperature Set Up

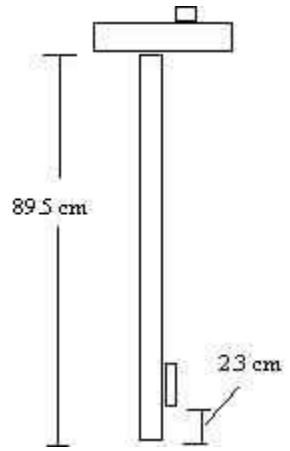

Figure 5 - Low Temp. Setup

On order to achieve low temperature operation, we placed our circuit inside of a Quantum Design Physical Properties Measurement System (PPMS). The TDO circuit was epoxied to a 89.5 cm 1/4 inch stainless steel tube attached to the bottom of a flange (Figure 5), the TDO circuit was paced 2.3 cm from the bottom of the steel tube. The TDO circuit was connected using stainless steel coaxial cable which was terminated using a Hermetic female BNC connector where it could be connected to the rest of our circuit. However due to design complications the inductor for the TDO circuit was 5 inches away from the center of the magnetic field.

D. Measuring Circuit

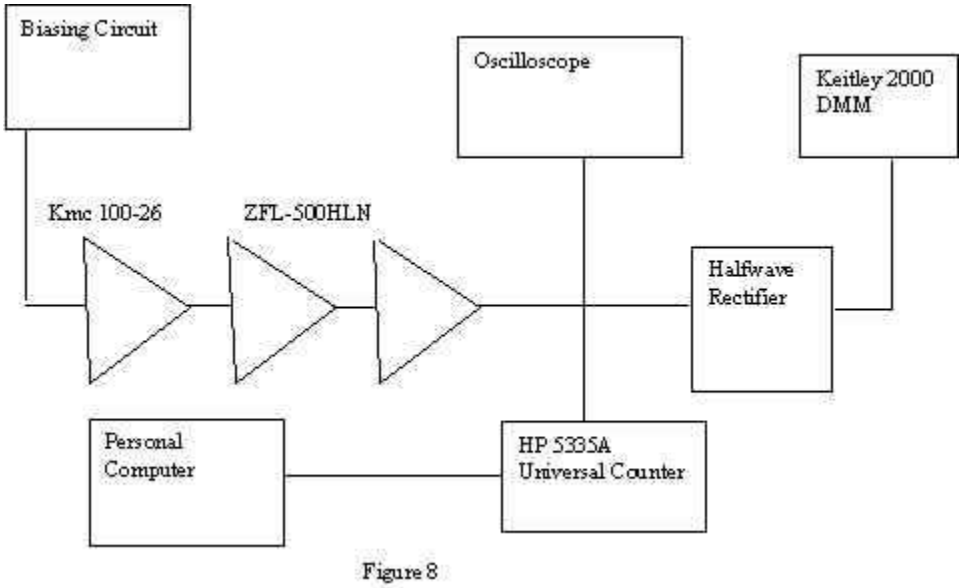

Figure 6 - Room Temp. Measuring Stage

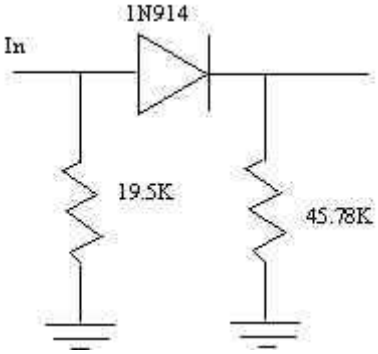

Figure 7 - Half-wave rectifier

After passing through high pass filter in the biasing circuit the signal was then amplified and read in using a frequency counter. We also observed our signal using a oscilloscope, which allows for optimal tuning of the tunnel diode oscillator circuit. We measured the output amplitude of our signal using a half wave rectifier circuit (Figure 7) and measured by a Keithley 2000 DMM. For this experiment we used two ZFL-500HLN Amplifiers made by Mini-Circuits and a Kmc Semiconductor 100-26 Amplifier for a total of 66 dBs of amplification. We filtered the signal using a SIF-30 30 MHz band-pass filter manufactured by Mini-Circuits. The signal was then passed to the half wave rectifier circuit, to the Frequency Counter and to the Oscilloscope. The half wave rectifier circuit consisted of a 45.783 and a 19.501 KOhm resistors and a 1N914 diode arranged as shown in (Figure 7) and was read out by the Keithley 2000 DMM. This circuit provides a linear output at 30MHz for peak to peak voltages greater than 1.395V which is significantly less than our amplified signal. We used a HP 5335A

Universal Counter for our frequency counter. The frequency counter and DMM were both connected to a PC for data acquisition. A block diagram of our room temperature setup is shown in figure 6.

.