Available online at www.sciencedirect.com
SCIENCE DIRECT®
Physica B 346–347 (2004) 534–538
PHYSICA B
www.elsevier.com/locate/physb

Surface impedance measurement with use of a tunnel diode oscillator in pulsed magnetic fields

Eriko Komatsu, Eiji Ohmichi*, Toshihito Osada

Institute for Solid State Physics, University of Tokyo, 5-1-5 Kashiwanoha Kashiwa, Chiba 277-8581, Japan

Abstract

We have developed a technique of surface impedance measurement with use of a tunnel diode oscillator in pulsed magnetic fields. Compared to conventional four-terminal resistivity measurements, this is a high-sensitive and non-contact method, enabling us to measure a small sample precisely. For the purpose of fast frequency readout, we constructed a simple FM demodulator, analogous to an FM radio receiver. With this demodulator, we succeeded in resistivity measurements in pulsed magnetic fields of up to 40 T at temperatures down to 0.6 K.
© 2004 Elsevier B.V. All rights reserved.

PACS: 74.25.Nf; 71.18.+y; 75.30.Kz

Keywords: Pulsed magnetic field; Surface impedance; Tunnel diode oscillator; FM demodulator

1. Introduction

Four-terminal resistivity measurement is one of the most fundamental measurements in pulsed field experiments. It gives detailed information on the electronic properties of materials. However, those measurements in pulsed magnetic field often become difficult for the following reasons. First of all, enough sensitivity cannot be obtained for highly conducting samples, because a time averaging of small signal is impossible in short pulse durations of 10–50 ms. In addition, terminal resistance as well as sample resistance inevitably causes heating by eddy currents at low temperatures. This heating problem might be solved by measuring small samples, but it becomes difficult to attach four terminals in this case.

As a method of non-contact resistivity measurement in static magnetic fields, a simple but high-sensitive technique has been reported [1]. A sample is placed in a self-resonance coil excited by a tunnel diode, and the change of skin depth δ is measured as the change of resonance frequency. This non-contact method is not only easy to operate but also high-sensitive and applicable to small samples. Therefore, in the present study, we newly developed this technique for use in pulsed field experiments. In order to solve the problem that a frequency counter does not catch up with transient signals in pulsed magnetic fields, we use a simple FM demodulator, analogous to an FM radio receiver. With this demodulator, we succeeded in resistivity measurements in pulsed magnetic fields of up to 40 T at temperatures

*Corresponding author. Tel./fax: +81-4-7135-1221.
E-mail address: ohmichi@issp.u-tokyo.ac.jp (E. Ohmichi).

0921-4526/$ - see front matter © 2004 Elsevier B.V. All rights reserved.
doi:10.1016/j.physb.2004.01.142

down to 0.6 K. In the following, we report the details of this technique and show experimental results on quantum oscillations in organic crystals and magnetic transitions in oxides.

2. Principle

In this technique, a small sample is placed in a tank coil of a self-resonance circuit, which is excited by a tunnel diode. When metals or superconductors are placed in the tank coil, an alternating field penetrates into the interior by skin depth δ or superconducting penetration depth λ, respectively. Then, both characteristic lengths change depending on temperature or magnetic field. So the effective coil volume where alternating magnetic field can penetrate changes. As a result, the inductance of the tank coil changes because the inductance is in proportion to the effective volume of the coil. Since the resonance frequency of the circuit is given by $f = (LC)^{-1/2}$, the frequency change Δf is combined with δ or λ. In this technique, the resonance frequency of the coil cavity is measured, but the amplitude is not pursued. In that sense, the quantity measured corresponds to the imaginary part of the surface impedance $Z_s = R_s + iX_s$, where R_s is the surface resistance and X_s is the surface reactance.

For metals, δ is converted to the resistivity ρ by the equation

$$\delta = \sqrt{\rho/\pi\mu_0 f},$$

where μ_0 is the permeability. It is difficult to obtain the absolute value, so we only pay attention to the relative change in the measurement. In this method, it is necessary that the sample size is larger than δ or λ, otherwise Δf is not proportional to $\Delta\delta$ or $\Delta\lambda$. On the other hand, for insulators, alternating magnetic field can penetrate into sample interior without shielding. In this case, the frequency change is combined with spin susceptibility χ.

3. Experiment

First, we constructed tunnel diode oscillator (TDO) circuit shown in Fig. 1. TDO is a simple

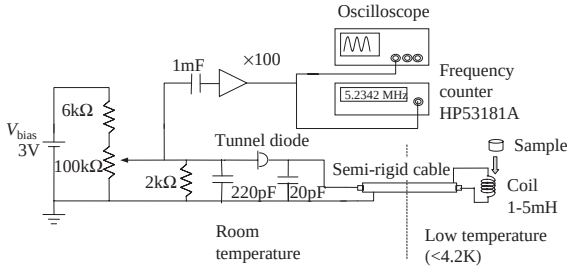

Fig. 1. Electrical circuit of a tunnel diode oscillator.

self-resonance oscillator in the MHz region using the negative differential resistance of a tunnel diode. Frequency stability is extremely high, reaching ppm order. Higher stability is obtained by measuring at 4.2 K. Since the current flowing in the circuit is of the order of μA, TDO can be applied to low-temperature experiments.

The coil is made of copper wire, wound by 50–100 turns around a capton tube with a diameter of 2 mm. This coil is connected to an external circuit out of the cryostat with a semi-rigid cable. The circuit is constructed by a tunnel diode BD-5, chip resistors and chip capacitors. A sample fixed at the end of a wooden rod is inserted in the coil. The center frequency was 5–10 MHz, depending on the coil inductance and the bias voltage. Oscillating signals are separated by a bypass capacitor, amplified by a gain of 100, and read by a frequency counter.

We tested the system by measuring the superconducting transition of superconductors since the transition is easily confirmed. The superconducting transition of high-T_c superconductor $YB_2C_3O_{7-\delta}$ is shown in Fig. 2. It clearly shows a rapid increase of the resonance frequency at $T = 82$ K, the onset of superconductivity. Thus, we succeeded in observing the superconducting transition in zero magnetic field by the frequency change.

4. Pulsed-field experiment

When doing experiments in pulsed high magnetic fields, there is a difficult problem. This is how to measure the resonance frequency in very short

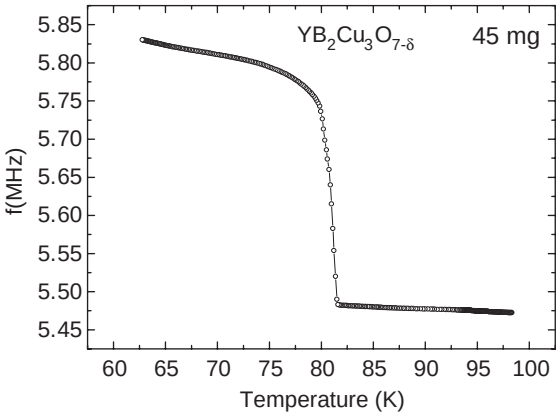

Fig. 2. Superconducting transition of $YB_2C_3O_{7-\delta}$ measured by the TDO circuit.

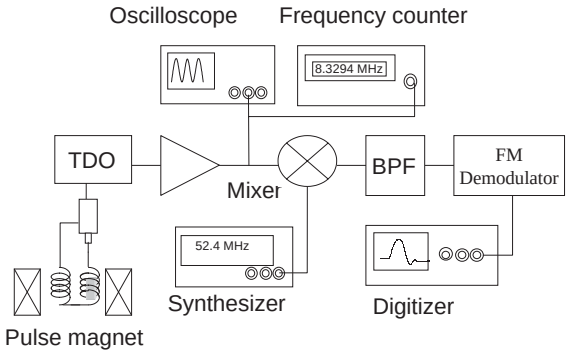

Fig. 3. Block diagram of the system.

time. The acquisition time of our frequency counter is 0.1 s, longer than typical pulsed field duration of 10–50 ms. So we have to look for a new method instead of a frequency counter. For this purpose, there are two solutions [2]. One is to acquire all the waveforms during pulsed field, and then to obtain the frequency numerically. However, this method deals with enormous data and costs much, so we choose another solution, a high-speed FM demodulation. This idea is based upon the fact that rapid frequency change in pulsed field is considered as FM signals. Then, signals are obtained as the frequency shift from the center frequency.

For FM demodulation, we pay attention to FM radio because the intermediate frequency (IF) and signal band width of FM radio are 10.7 MHz, and 75 kHz, respectively, which are comparable to those of TDO circuit. So we tried to use an IC for FM radio for FM demodulation in pulsed magnetic field. With this method, demodulated signals are obtained directly. Also, the system is constructed at low cost.

Using an FM radio demodulator, we constructed the system shown in Fig. 3. Since the input frequency of the demodulator is fixed to 10.7 MHz, the frequency f of TDO is mixed with a sinusoidal wave of $(10.7 - f)$ MHz generated by a synthesizer, and then converted into 10.7 MHz and $(10.7 - 2f)$ MHz. In the end, the frequency 10.7 MHz is selected by a band pass filter.

We use LA1231N (SANYO) as FM demodulator. It contains all the necessary functions for FM demodulation. The demodulation is based upon quadrature detection. The sensitivity is about 2.5 mV/kHz and the noise is evaluated to be $\sim$100 Hz in pulsed magnetic fields. In pulsed field experiments, it is necessary to use two coils counterwound with respect to each other, so that the induced voltage by rapid field sweeps is compensated. We used long-pulse magnet with duration of 60 ms and the maximum field of $B_{max} = 42$ T. Temperature down to 0.6 K was obtained by a ^{3}He refrigerator.

5. Results and discussion

In the following, we show the experimental results obtained in pulsed magnetic fields. We choose an organic crystal α-(BEDT-TTF)$_2$KHg(SCN)$_4$ and an oxide itinerant metamagnet $Sr_3Ru_2O_7$ as test samples.

First, we measured α-(BEDT-TTF)$_2$KHg(SCN)$_4$ (mass of 0.67 mg) which is famous for large quantum oscillations and the kink-transition [3]. The results are shown in Fig. 4(a). Quantum oscillations appeared even at 4.2 K. The lower the temperature is, the larger the amplitude of the quantum oscillations is. At the lowest temperature of 0.65 K, quantum oscillations started to appear at $\sim$12 T. In conventional four-terminal resistivity measurements, the resistivity increases rapidly in the low magnetic field region, and then

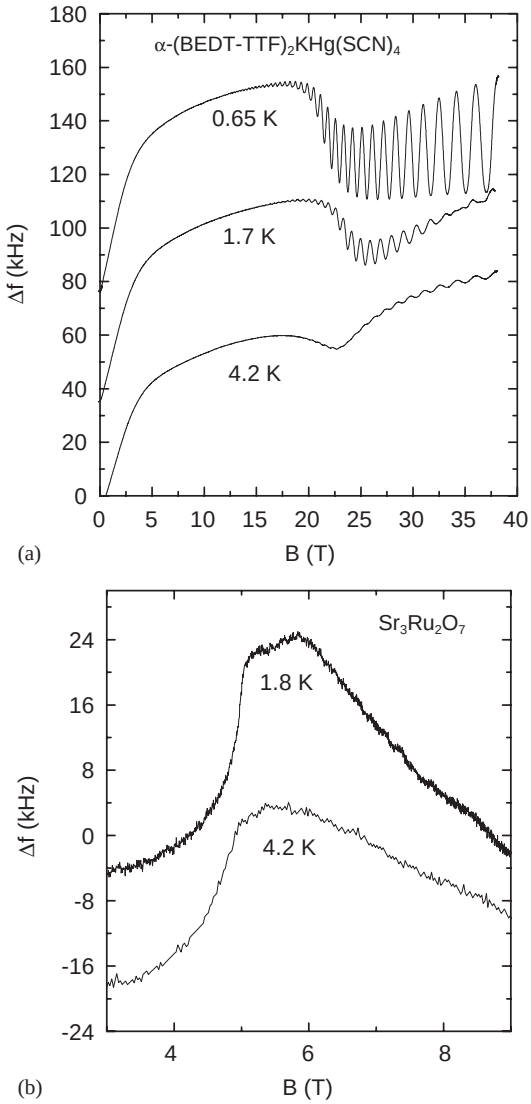

Fig. 4. Frequency shift of the TDO. Data are offset for clarity. (a) α-(BED-TTF)$_2$KHg(SCN)$_4$: Background is not subtracted. (b) $Sr_3Ru_2O_7$: Background is subtracted.

it shows a peak at ~15 T, followed by the kink transition at ~23 T. Our present data are in agreement with the behaviour, taking into account that the background signals increasing with magnetic field are superposed. In data at 1.7 K, a node of oscillation amplitude is observed at ~35 T. Considering that this behaviour appears only in resistivity measurements [4], this is the evidence that the present method reflects the behaviour of δ.

Next, $Sr_3Ru_2O_7$ is known to show metamagnetic transitions at 5.1 and 5.8 T below ~2.5 K when magnetic field is aligned to the *ab*-plane [5]. It has been difficult to measure such transitions by resistivity measurement in pulsed magnetic field because of the small resistance value of the order of mΩ. However, we succeeded in measuring the two transitions as shown in Fig. 4(b). The data at 4 K shows a single and broad transition but two humps are clearly observed at 1.8 K.

6. Summary and future plan

We have developed a technique of surface impedance measurement with use of a tunnel diode oscillator in pulsed magnetic fields. For this purpose, we constructed a simple FM demodulator, analogous to an FM radio receiver. With this demodulator, we succeeded in high-sensitive resistivity measurements in pulsed magnetic fields of up to 40 T at temperatures down to 0.6 K.

Compared to conventional four-terminal resistivity measurements, this is a non-contact method and applicable to highly conducting samples. We expect that this method opens up new possibilities in pulsed field experiments. In addition, less heat dissipation of this technique is suitable for experiments at low temperature.

In the future, we take advantages of this non-contact and high-sensitivity method; it can be applied to resistivity measurements under uniaxial pressure where it is a task to attach four-terminals to a sample. Another interesting application is to use with microcoils made by lithography instead of hand-wound coils. This is suitable for a very small samples or thin films. Also, better signal-to-noise ratio and high reproducibility of the data are expected due to complete field cancellation.

Acknowledgements

We are grateful to S.I. Ikeda and Y. Yoshida for supplying high-quality samples. A part of this work is supported by a Grant-in-Aid for Encour-

agement of Young Scientist from the Japan Society for the Promotion of Science.

References

[1] G.J. Athas, J.S. Brooks, S.J. Klepper, S. Uji, M. Tokumoto, Rev. Sci. Instrum. 64 (1993) 3248.
[2] T. Coeffy, Z. Bayindir, J.F. DeCarolis, M. Bennett, G. Esper, C.C. Agosta, Rev. Sci. Instrum. 71 (2000) 4600.
[3] T. Osada, R. Yagi, A. Kawasumi, S. Kagoshima, N. Miura, M. Oshima, G. Saito, Phys. Rev. B 41 (1990) 5428.
[4] M.M. Honold, N. Harrison, M.V. Kartsovnik, H. Yaguchi, J. Singleton, C.H. Mielke, N.D. Kushch. M. Kurmoo, P. Day, Phys. Rev. B 62 (2000) 7908.
[5] E. Ohmichi, Y. Yoshida, S.I. Ikeda, N.V. Mushnikov, T. Goto, T. Osada, Phys. Rev. B (2003) 024432.